ORDER NO. AD9105131C1
A2

Service Manual

Receiver

AV Control Stereo Receiver

DOLBY SURROUND PRO • LOGIC *

SA-GX505

Color

(K)... Black Type

Area

Country Code	Area	Color
(P)	U.S.A.	(K)
(PC)	Canada.	

* Manufactured under license from Dolby Laboratories Licensing Corporation. Additionnally licenced under one or more of the following patents: U.S. numbers 3,632,886, 3,746,792 and 3,959,590; Canadian numbers 1,004,603 and 1,037,877.
"Dolby" and the double-D symbol are trademarks of Dolby Laboratories Licensing Corporation.

SPECIFICATIONS (IHF'78)

■ AMPLIFIER SECTION

Rated minimum sine wave
RMS power output
20 Hz~20 kHz both channels driven
0.05% total harmonic distortion
110 W per channel (8 Ω)

1 kHz continuous power output both channels driven 0.05% total harmonic distortion	115 W per channel (8 Ω)
Total harmonic distortion	
rated power at 20 Hz~20 kHz	0.05% (8 Ω)
half power at 1 kHz	0.03% (8 Ω)
Dynamic headroom	1.2 dB (8 Ω)
SMPTE intermodulation distortion	0.3% (8 Ω)
Frequency response	
PHONO	RIAA standard curve ±0.8 dB
CD, VCR 1, VCR 2, TAPE	7 Hz~70 kHz, ±3 dB
Input sensitivity	
PHONO	0.4 mV (3 mV, IHF '66)
CD, VCR 1, VCR 2, TAPE	27 mV (200 mV, IHF '66)
S/N (IHF, A)	
PHONO	70 dB (80 dB, IHF '66)
CD, VCR 1, VCR 2, TAPE	70 dB (90 dB, IHF '66)
Phono maximum input voltage	160 mV (IHF '66)
Input impedance	
PHONO	47 kΩ
CD, VCR 1, VCR 2, TAPE	22 kΩ
Tone controls	
BASS	50 Hz, +10~−10 dB
TREBLE	20 kHz, +10~−10 dB
4 band parametric equalizer	+10~−10 dB
Loudness control (volume at −30 dB)	50 Hz, +9 dB
Low frequency damping factor	30 (8 Ω)
Load impedance	
A or B	4~8 Ω
A and B	8 Ω

■ SURROUND AMPLIFIER SECTION

Power output (Rear)	1 kHz, 10 W (8 Ω) (T.H.D. 0.8 %)
Power output (Center)	100 Hz~15 kHz, 10 W (8 Ω) (T.H.D. 0.8 %)

■ FM TUNER SECTION

Frequency range	87.9~107.9 MHz
Sensitivity	11.2 dBf (2 μV, IHF '58)
50 dB quieting sensitivity	
MONO	20.2 dBf (5.6 μV, IHF '58)
STEREO	40.2 dBf (56 μV, IHF '58)
Total harmonic distortion	
MONO	0.2%
STEREO	0.3%
S/N	
MONO	75 dB
STEREO	70 dB
Frequency response	20 Hz~15 kHz, +1 dB, −2 dB
Alternate channel selectivity	65 dB
Capture ratio	1.0 dB
Image rejection at 98 MHz	45 dB
IF rejection at 98 MHz	80 dB
Spurious response rejection at 98 MHz	75 dB
AM suppression	50 dB
Stereo separation	
1 kHz	40 dB
10 kHz	30 dB
Carrier leak	
19 kHz	−35 dB
38 kHz	−50 dB
Antenna terminals	300 Ω (balanced) 75 Ω (unbalanced)

Technics

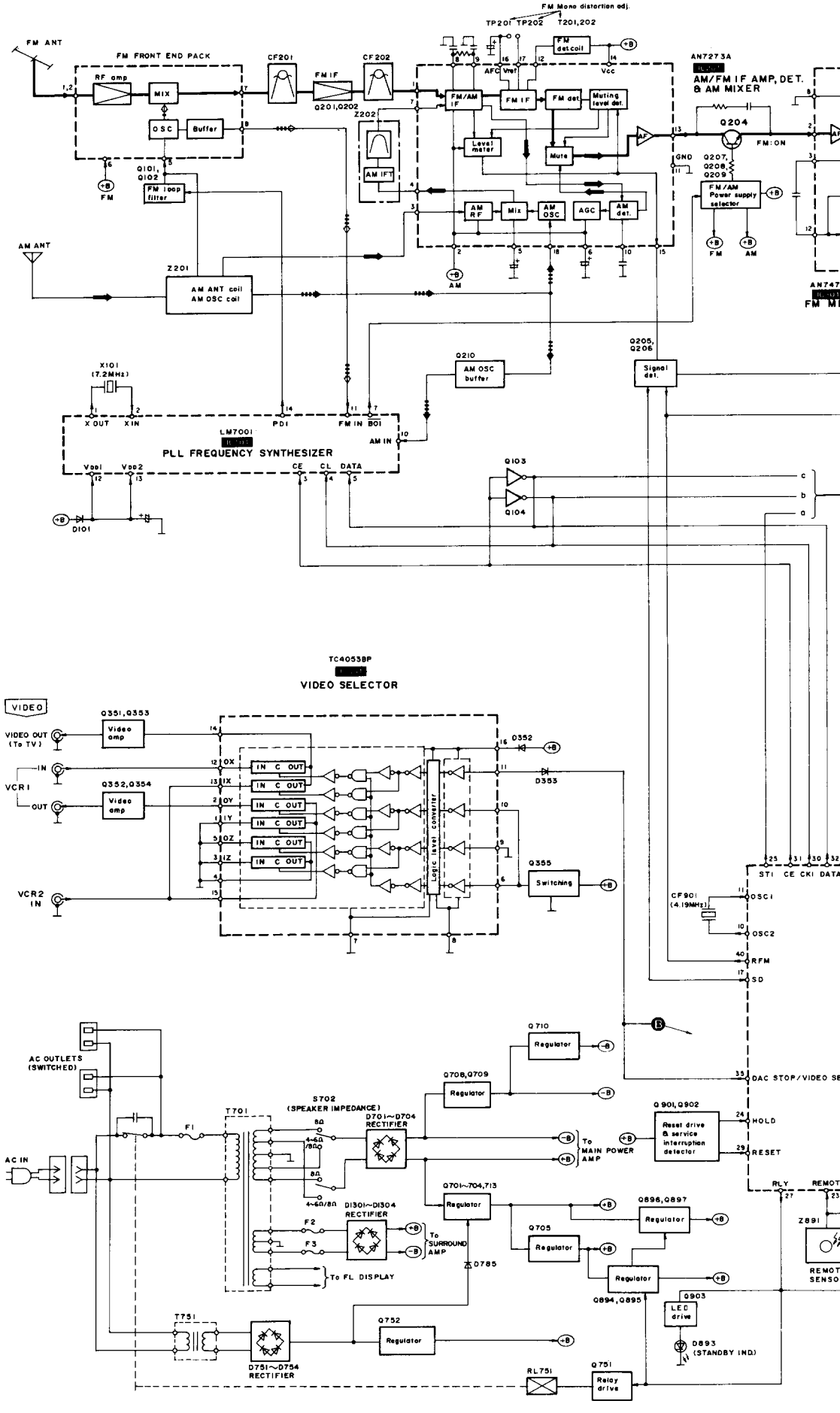
FM Mono distortion adj.
TP201 TP202 T201,202
FM ANT
FM FRONT END PACK
RF amp
MIX
OSC
Buffer
CF201
FM IF
CF202
Q201,Q202
Z202
AM IFT
FM det.coil
AFC Vref
Vcc
FM/AM IF
FM IF
FM det.
Muting level det.
Level meter
Mute
AM RF
Mix
AM OSC
AGC
AM det.
AN7273A
AM/FM IF AMP, DET. & AM MIXER
Q204
FM:ON
GND
Q207, Q208, Q209
FM/AM Power supply selector
FM
AM
Q101, Q102
FM loop filter
AM ANT
Z201
AM ANT coil
AM OSC coil
Q210
AM OSC buffer
Q205, Q206
Signal det.
X101 (7.2MHz)
X OUT
X IN
PD1
FM IN
BO1
AM IN
LM7001
PLL FREQUENCY SYNTHESIZER
VDD1
VDD2
CE
CL
DATA
D101
Q103
Q104
TC4053BP
VIDEO SELECTOR
VIDEO
VIDEO OUT (To TV)
Q351,Q353
Video amp
VCR1
IN
OUT
Q352,Q354
Video amp
VCR2 IN
IN C OUT
Logic level converter
D352
D353
Q355
Switching
CF901 (4.19MHz)
OSC1
OSC2
RFM
SD
STI
CE
CKI
DATA
AC OUTLETS (SWITCHED)
AC IN
F1
T701
S702 (SPEAKER IMPEDANCE)
D701~D704 RECTIFIER
Q708,Q709
Regulator
Q710
Regulator
To MAIN POWER AMP
Q901,Q902
Reset drive & service interruption detector
HOLD
RESET
DAC STOP/VIDEO SE
RLY
REMOT
Z891
REMOT SENSO
Q701~704,713
Regulator
Q896,Q897
Regulator
Q705
Regulator
Regulator
Q894,Q895
Q903
LED drive
D893 (STANDBY IND.)
D1301~D1304 RECTIFIER
F2
F3
To SURROUND AMP
To FL DISPLAY
D785
T751
D751~D754 RECTIFIER
Q752
Regulator
RL751
Q751
Relay drive

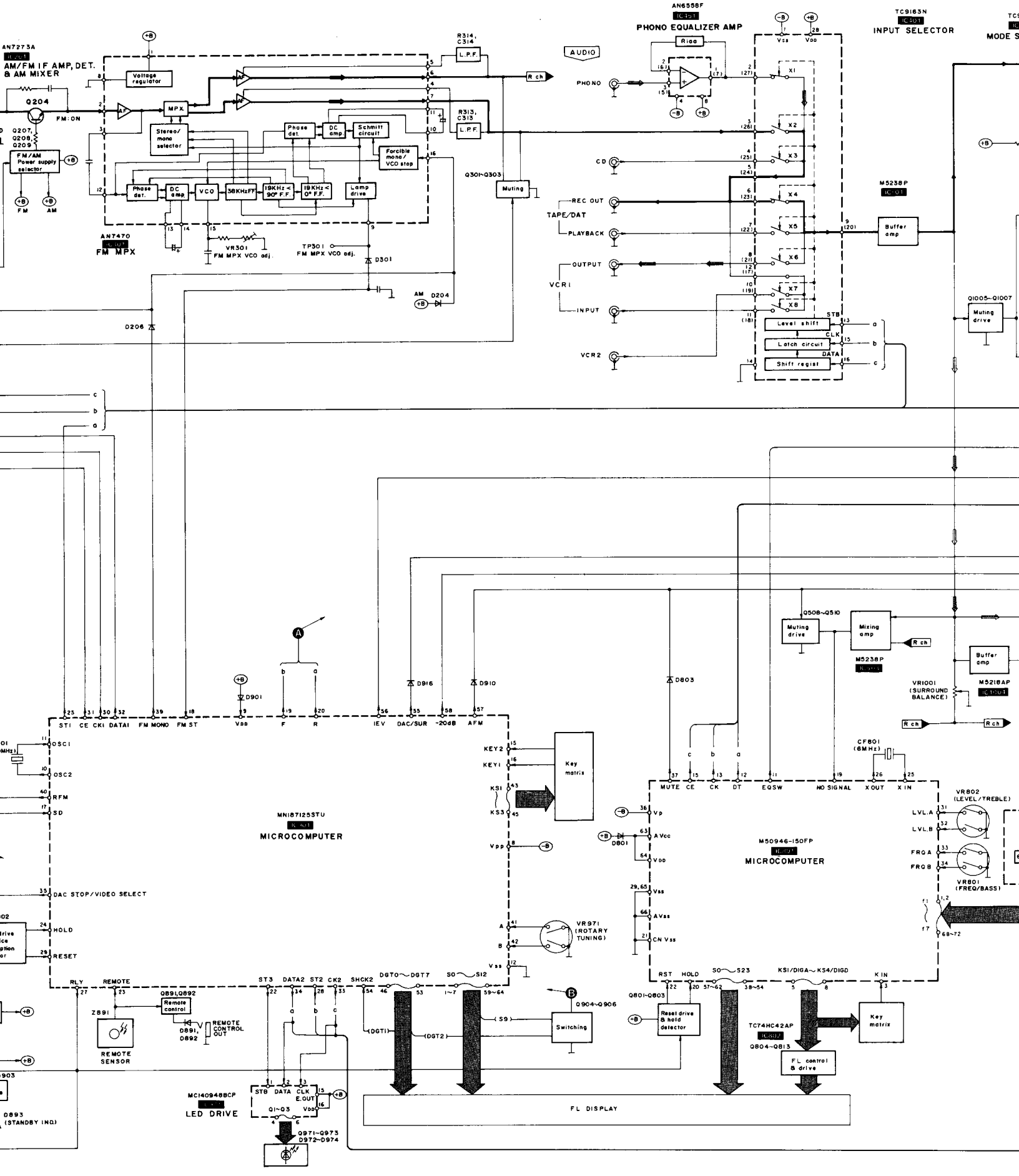
AN7273A
AM/FM IF AMP, DET. & AM MIXER
Q204
FM:ON
Q207, Q208, Q209
FM/AM Power supply selector
FM
AM
Voltage regulator
MPX
Stereo/mono selector
Phase det.
DC amp
Schmitt circuit
Forcible mono/VCO stop
Phase det.
DC amp
VCO
38KHzFF
19KHz < 90° F.F.
19KHz < 0° F.F.
Lamp drive
R314, C314
L.P.F.
R313, C313
L.P.F.
R ch
Q301~Q303
Muting
ANT470
FM MPX
VR301
FM MPX VCO adj.
TP301
FM MPX VCO adj.
D301
AM
D204
D206
AN6558F
PHONO EQUALIZER AMP
AUDIO
PHONO
CD
TAPE/DAT
PLAYBACK
VCR1
OUTPUT
INPUT
VCR2
REC OUT
X1
X2
X3
X4
X5
X6
X7
X8
TC9163N
INPUT SELECTOR
M5238P
Buffer amp
STB
CLK
DATA
Level shift
Latch circuit
Shift regist
Q1005~Q1007
Muting drive
D901
D916
D910
D803
STI
CE
CKI
DATAI
FM MONO
FM ST
Vpp
F
R
IEV
DAC/SUR
-20dB
AFM
Q508~Q510
Muting drive
Mixing amp
M5238P
Buffer amp
M5218AP
VR1001 (SURROUND BALANCE)
CF801 (6MHz)
MUTE
CE
CK
DT
EQSW
NO SIGNAL
XOUT
XIN
VR802 (LEVEL/TREBLE)
LVL.A
LVL.B
FRQ.A
FRQ.B
VR801 (FREQ/BASS)
OSC1
OSC2
RFM
SD
MN1871253TU
MICROCOMPUTER
KEY2
KEY1
KS1
KS3
Key matrix
Vpp
D801
M50946-150FP
MICROCOMPUTER
Vp
AVcc
Vdd
Vss
AVss
CN Vss
DAC STOP/VIDEO SELECT
HOLD
RESET
VR971 (ROTARY TUNING)
RLY
REMOTE
Q891,Q892
Remote control
Z891
REMOTE SENSOR
D891, D892
REMOTE CONTROL OUT
ST3
DATA2
ST2
CK2
SHCK2
DGT0~DGT7
S0~S12
Vss
(DGT1)
(DGT2)
S9
Q904~Q906
Switching
RST
HOLD
S0~S23
KSI/DIGA~KS4/DIGD
KIN
Q801~Q803
Reset drive & hold detector
TC74HC42AP
Q804~Q813
FL control & drive
Key matrix
FL DISPLAY
MC140948BCP
LED DRIVE
STB
DATA
CLK
E.OUT
Vpp
Q1~Q3
Q971~Q973
D972~D974
D893 (STANDBY IND)

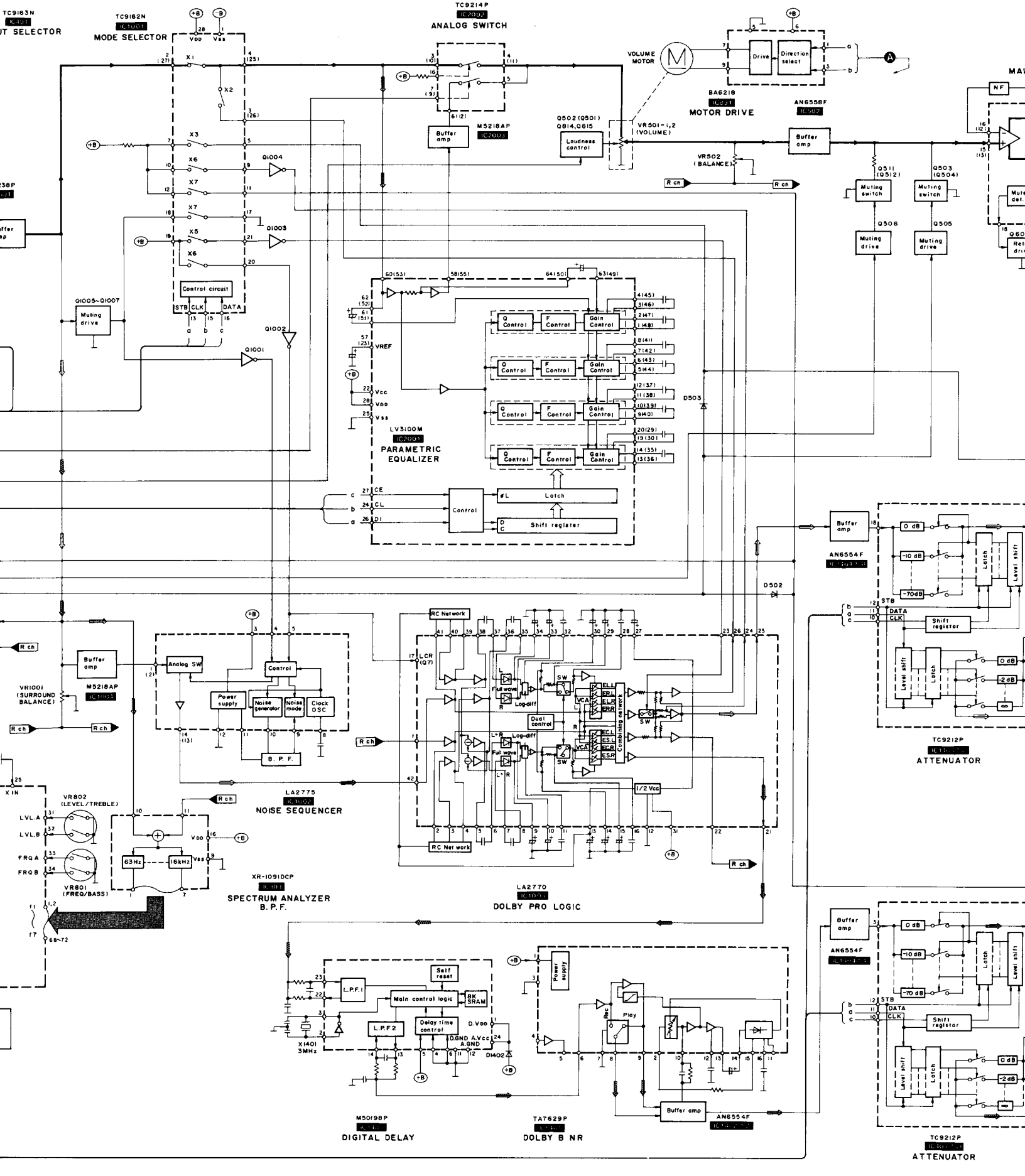
TC9163N
IC3001
UT SELECTOR
TC9162N
IC1001
MODE SELECTOR
TC9214P
IC2002
ANALOG SWITCH
VOLUME MOTOR
Drive
Direction select
BA6218
IC651
MOTOR DRIVE
AN6558F
IC502
M5218AP
IC2003
Buffer amp
Loudness control
Q502 (Q501)
Q814, Q815
VR501-1,2 (VOLUME)
VR502 (BALANCE)
Q1004
Q1003
Q1002
Q1001
Q1005~Q1007
Muting drive
Control circuit
STB
CLK
DATA
Muting switch
Q511 (Q512)
Q503 (Q504)
Q506
Q505
R ch
LV3100M
IC2003
PARAMETRIC EQUALIZER
VREF
Vcc
Vdd
Vss
Q Control
F Control
Gain Control
CE
CL
DI
Control
Latch
Shift register
D503
D502
AN6554F
0 dB
-10 dB
-70dB
Level shift
TC9212P
ATTENUATOR
VR1001 (SURROUND BALANCE)
M5218AP
IC1004
Analog SW
Power supply
Noise generator
Noise mode
Clock OSC
B. P. F.
LA2775
IC1006
NOISE SEQUENCER
RC Network
LCR (Q7)
Full wave
Log-diff
Dual control
VCA
Combining network
1/2 Vcc
LA2770
IC1007
DOLBY PRO LOGIC
XIN
VR802 (LEVEL/TREBLE)
LVL.A
LVL.B
FRQ.A
FRQ.B
VR801 (FREQ/BASS)
63Hz
16kHz
XR-1091DCP
IC401
SPECTRUM ANALYZER B.P.F.
Self reset
Main control logic
8K SRAM
L.P.F.1
L.P.F.2
Delay time control
X1401 3MHz
D1402
M50198P
DIGITAL DELAY
Power supply
Rec
Play
TA7629P
DOLBY B NR

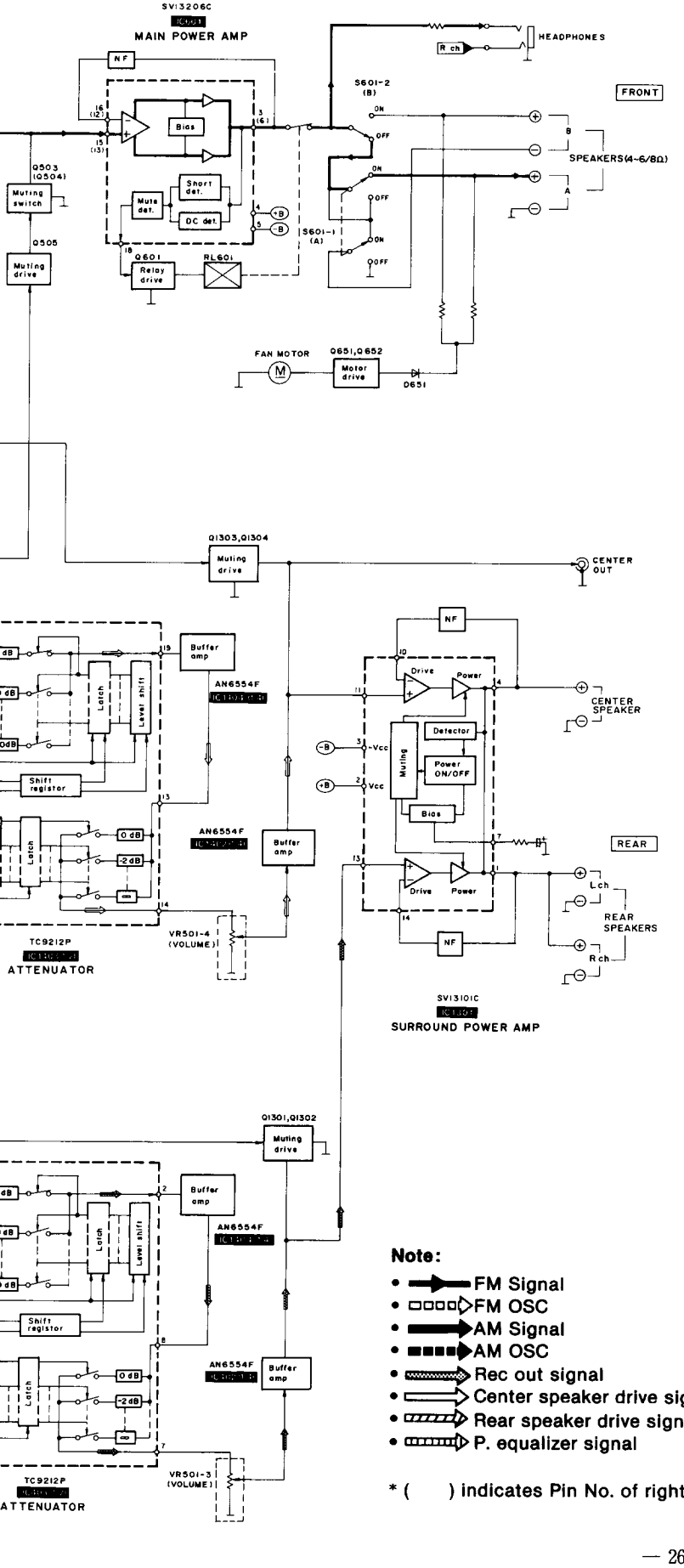

Note:

- FM Signal
- FM OSC
- AM Signal
- AM OSC
- Rec out signal
- Center speaker drive signal
- Rear speaker drive signal
- P. equalizer signal

* ( ) indicates Pin No. of right channel.

■ INTERNAL CONNECTION OF FL

• Grid connection diagram

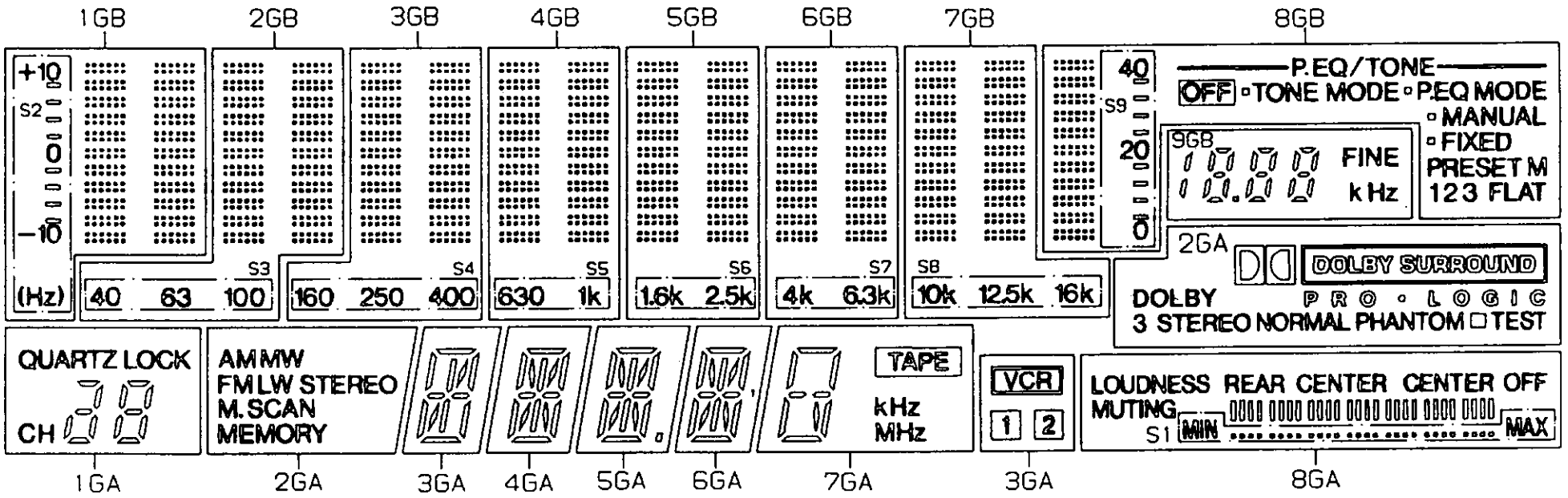

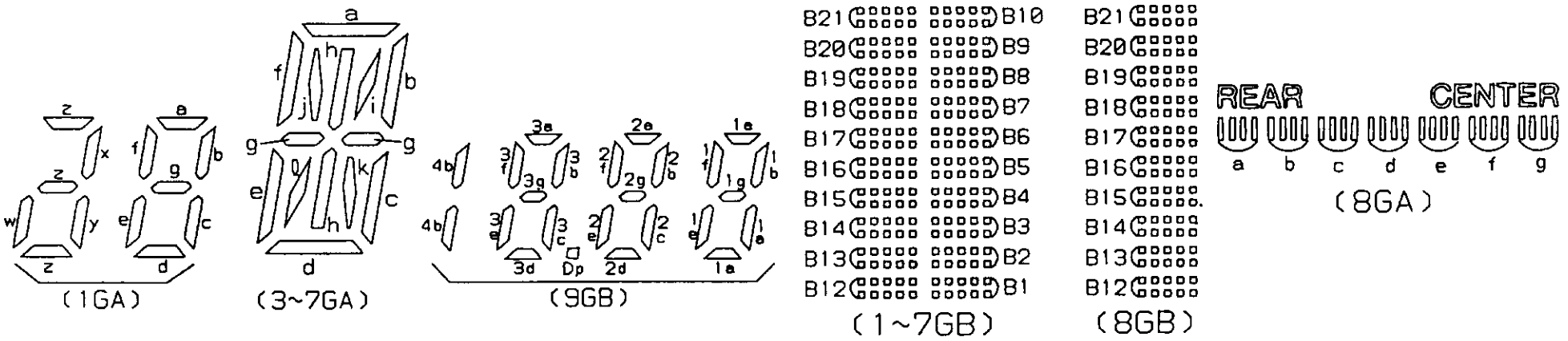

• Pin connection

62	61	60	59	58	57	56	55	54	53	52	51	50	49	48	47	46	45	44	43	42	41	40	39	38	37	36	35	34	33	32	31	30	29	28	27	26	25	24	23	22	21	20	19	18	17	16	15	14	13	12	11	10	9	8	7	6	5	4	3	2	1
F2	F2	F2	NP	1GA	2GA	3GA	4GA	5GA	6GA	7GA	8GA	P13A	P12A	P11A	P10A	P9A	P8A	P7A	P6A	P5A	P4A	P3A	P2A	P1A	P22B	P21B	P20B	P19B	P18B	P17B	P16B	P15B	P14B	P13B	P12B	P11B	P10B	P9B	P8B	P7B	P6B	P5B	P4B	P3B	P2B	P1B	P22A	P21A	P20A	P19A	P18A	P17A	P16A	P15A	P14A	P13A	P12A	P11A	P10A	P9A	P8A	P7A	P6A	P5A	P4A	P3A	P2A	P1A	NP	NP	F1	F1	F1

• Anode connection table (A)

	1GA	2GA	3GA	4GA	5GA	6GA	7GA	8GA
P1A	a	NORMAL	a	a	a	a	a	S1
P2A	x	PHANTOM	i , ℓ	j	j	j	–	a
P3A	y	AM	h	h	h	h	TAPE	b
P4A	z	MW	1	i	i	i	–	c
P5A	f	FM	f	f	f	f	f	d
P6A	b	LW	b	b	b	b	b	e
P7A	g	DOLBY SURROUND	g	g	g	g	g	f
P8A	e	PRO • LOGIC	e	e	e	e	e	g
P9A	c	M.SCAN	c	c	c	c	c	MUTING
P10A	w	MEMORY	2	ℓ	ℓ	ℓ	kHz	LOUDNESS
P11A	d	DOLBY 3 STEREO	d	d	d	d	d	REAR
P12A	QUARTZ LOCK	□TEST	VCR	k	k	k	k	CENTER
P13A	CH	STEREO (LW)	–	–	▯	–	MHz	CENTER OFF

• **Anode connection table (B)**

	1GB	2GB	3GB	4GB	5GB	6GB	7GB	8GB	9GB
P1B	S2	S3	S4	S5	S6	S7	S8	S9 —P.EQ/TONE—	Hz
P2B	B1	B1	B1	B1	B1	B1	B1	M	Dp k
P3B	B2	B2	B2	B2	B2	B2	B2	PRESET	FINE
P4B	B3	B3	B3	B3	B3	B3	B3	▫FIXED	1a
P5B	B4	B4	B4	B4	B4	B4	B4	▫MANUAL	1b
P6B	B5	B5	B5	B5	B5	B5	B5	3	1e
P7B	B6	B6	B6	B6	B6	B6	B6	2	1f
P8B	B7	B7	B7	B7	B7	B7	B7	1	1g
P9B	B8	B8	B8	B8	B8	B8	B8	FLAT	2c
P10B	B9	B9	B9	B9	B9	B9	B9	▫P.EQ MODE	2b
P11B	B10	B10	B10	B10	B10	B10	B10	▫TONE MODE	2d
P12B	B11	B11	B11	B11	B11	B11	B11	OFF	2g
P13B	B12	B12	B12	B12	B12	B12	B12	B12	2a
P14B	B13	B13	B13	B13	B13	B13	B13	B13	2e
P15B	B14	B14	B14	B14	B14	B14	B14	B14	2f
P16B	B15	B15	B15	B15	B15	B15	B15	B15	3c
P17B	B16	B16	B16	B16	B16	B16	B16	B16	3b
P18B	B17	B17	B17	B17	B17	B17	B17	B17	3d
P19B	B18	B18	B18	B18	B18	B18	B18	B18	3g
P20B	B19	B19	B19	B19	B19	B19	B19	B19	3a
P21B	B20	B20	B20	B20	B20	B20	B20	B20	3e
P22B	B21	B21	B21	B21	B21	B21	B21	B21	3f
P23B	B22	B22	B22	B22	B22	B22	B22	B22	4b

■ PROTECTION CIRCUITRY

The protection circuitry may have operated if either of the following conditions is noticed:
- No sound is heard when the power is turned on.
- Sound stops during a performance.

The function of this circuitry is to prevent circuitry damage if, for example, the positive and negative speaker connection wires are "shorted", or if speaker systems with an impedance less than the indicated rated impedance of the amplifier are used.

If this occurs, follow the procedure outlines below:
1. Turn off the power.
2. Determine the cause of the problem and correct it.
3. Turn on the power once again after one minute.

Note:

When the protection circuitry functions, the unit will not operate unless the power is first turned off and then on again.

■ BEFORE REPAIR AND ADJUSTMENT

Disconnect AC power, Discharge both Power Supply Capacitors C701 and C702 through a 10Ω, 5W resistor to ground.
DO NOT SHORT-CIRCUIT DIRECTLY (with a screwdriver blade, for instance), as this may distroy solid state devices.
After repairs are completed, restore power gradually using a variac, to avoid overcurrent.
Current consumption at 120V, 60Hz in NO SIGNAL mode should be 0.55~1.3A.

C PARAMETRIC EQ CIRCUIT

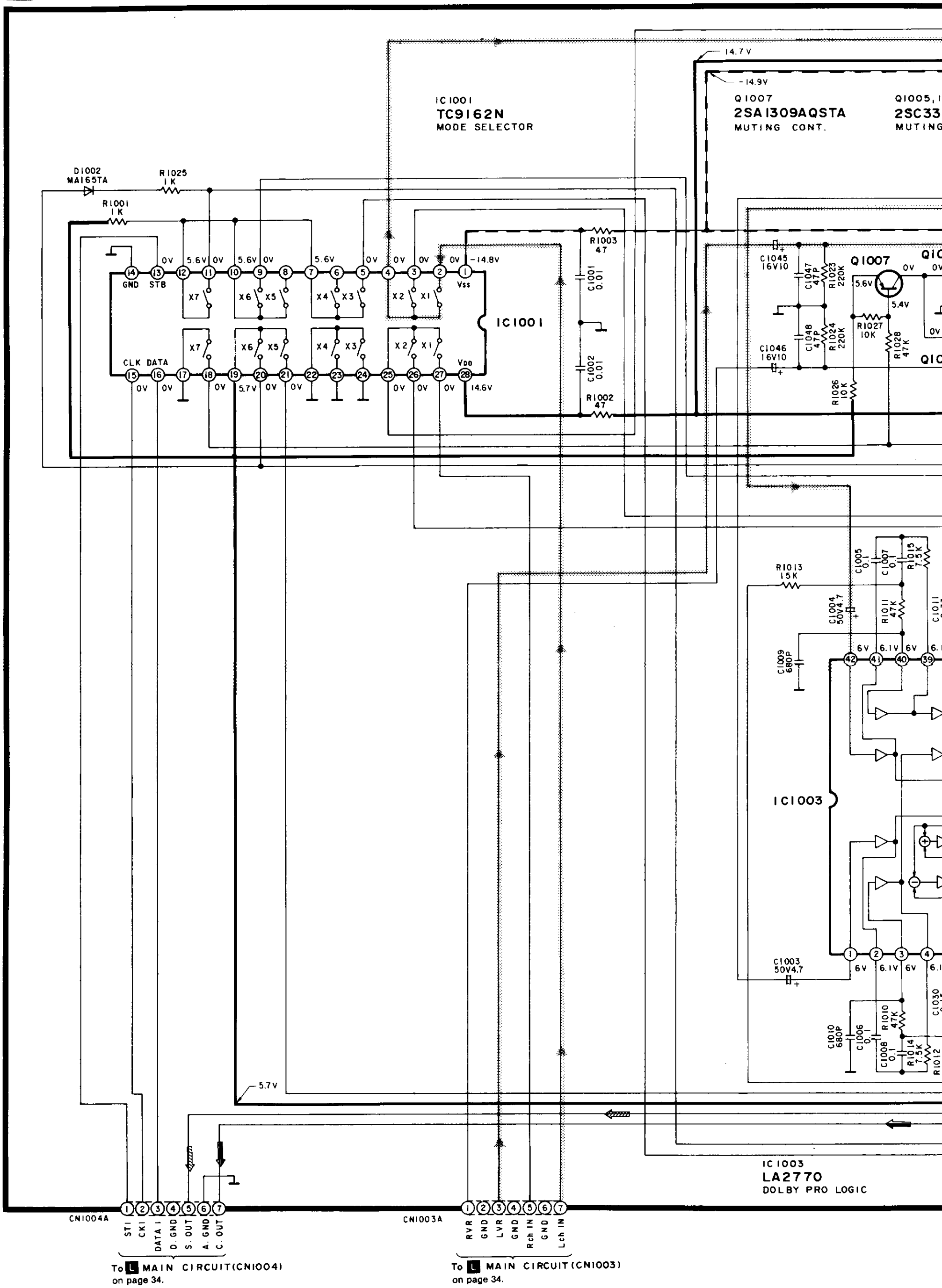

To L MAIN CIRCUIT(CN1004)
on page 34.

To L MAIN CIRCUIT(CN1003)
on page 34.

5 6 7 8 9 10

09AQSTA
CONT.

Q1005, 1006
2SC3327ABTP
MUTING

IC1004
M5218AP
BUFFER AMP

IC1002
LA2775
NOISE
SEQUENCER

Q1001 ~ 1003
UN4211TA
SWITCHING

Q1004
2SC1740SQSTA
SWITCHING

IC2002
TC9214P
ANALOG SWITCH

IC1003
A2770
LBY PRO LOGIC

P. Equalizer signal.

Center speaker drive signal

Rear speaker drive signal

5.7V

14.7V

-14.9V

CN1002A
Lch OUT
+B (2)
EQ SW
+B (1)
-B (1)
C. MUTE
S. MUTE

To L MAIN CIRCUIT(CN1002)
on page 34.

CN1001A

To L MAIN
on page 33.

10 11 12 13 14

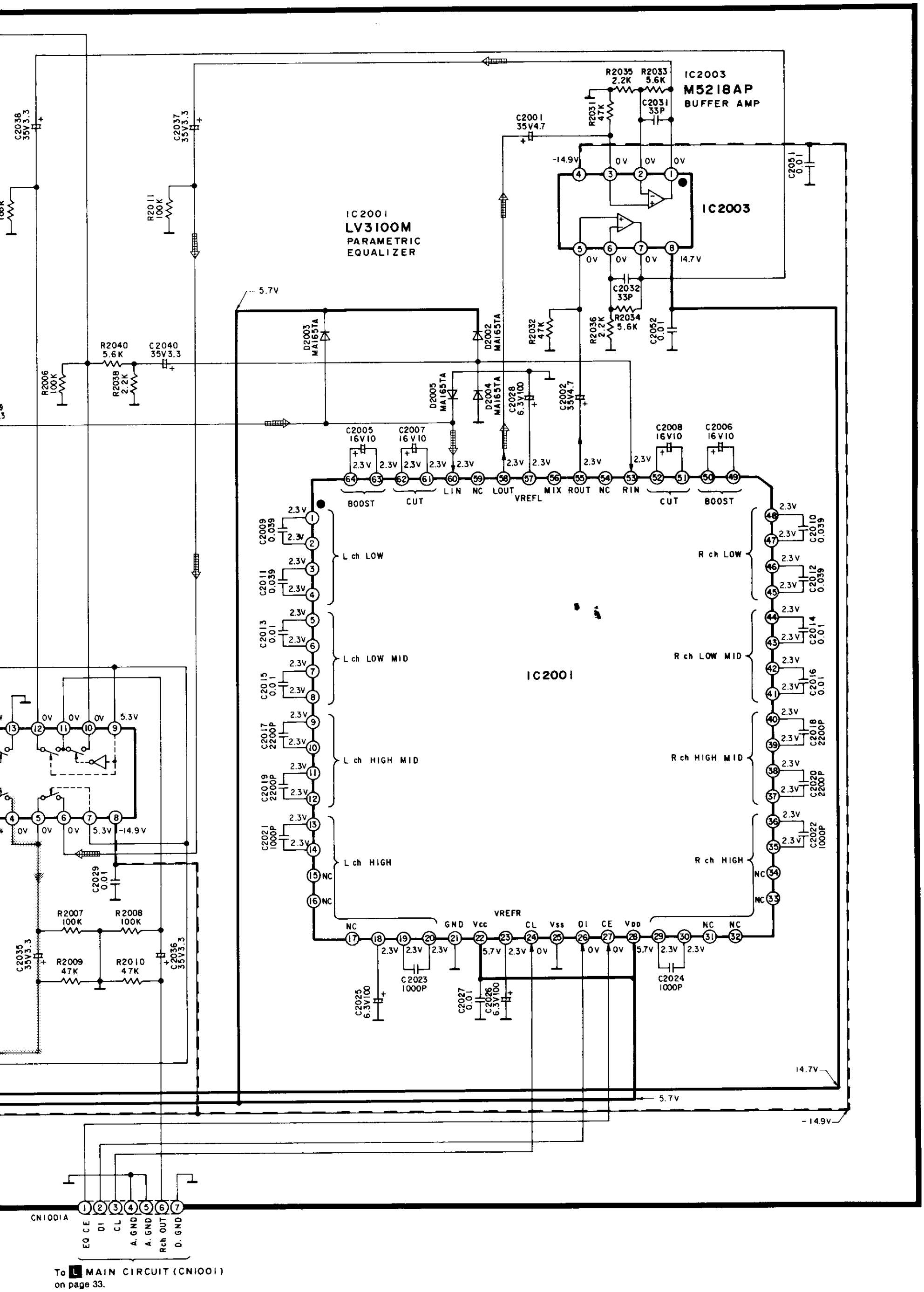

To L MAIN CIRCUIT (CN1001)
on page 33.

F FL DRIVE CIRCUIT

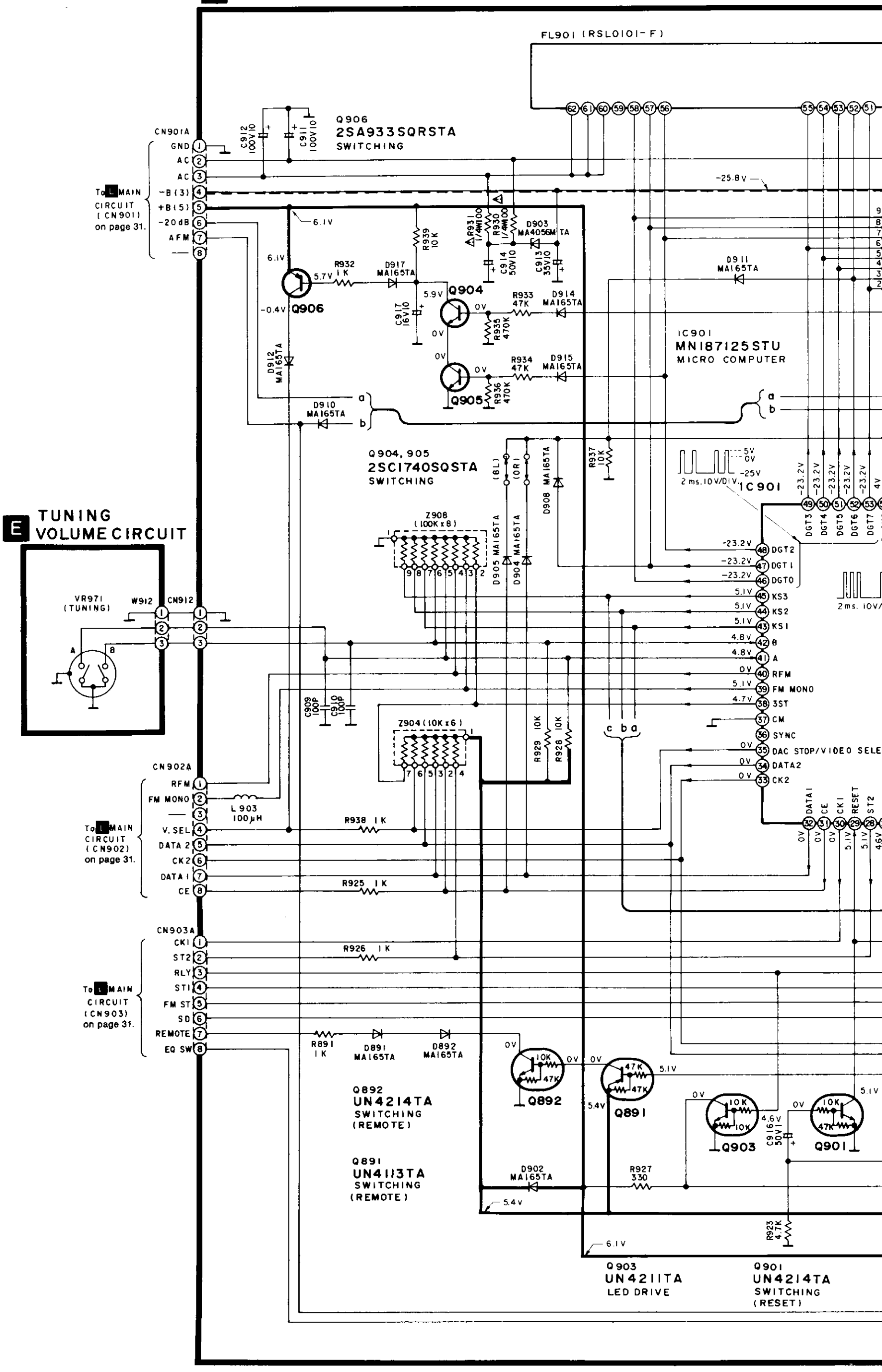

5 6 7 8 9 10

FL DISPLAY

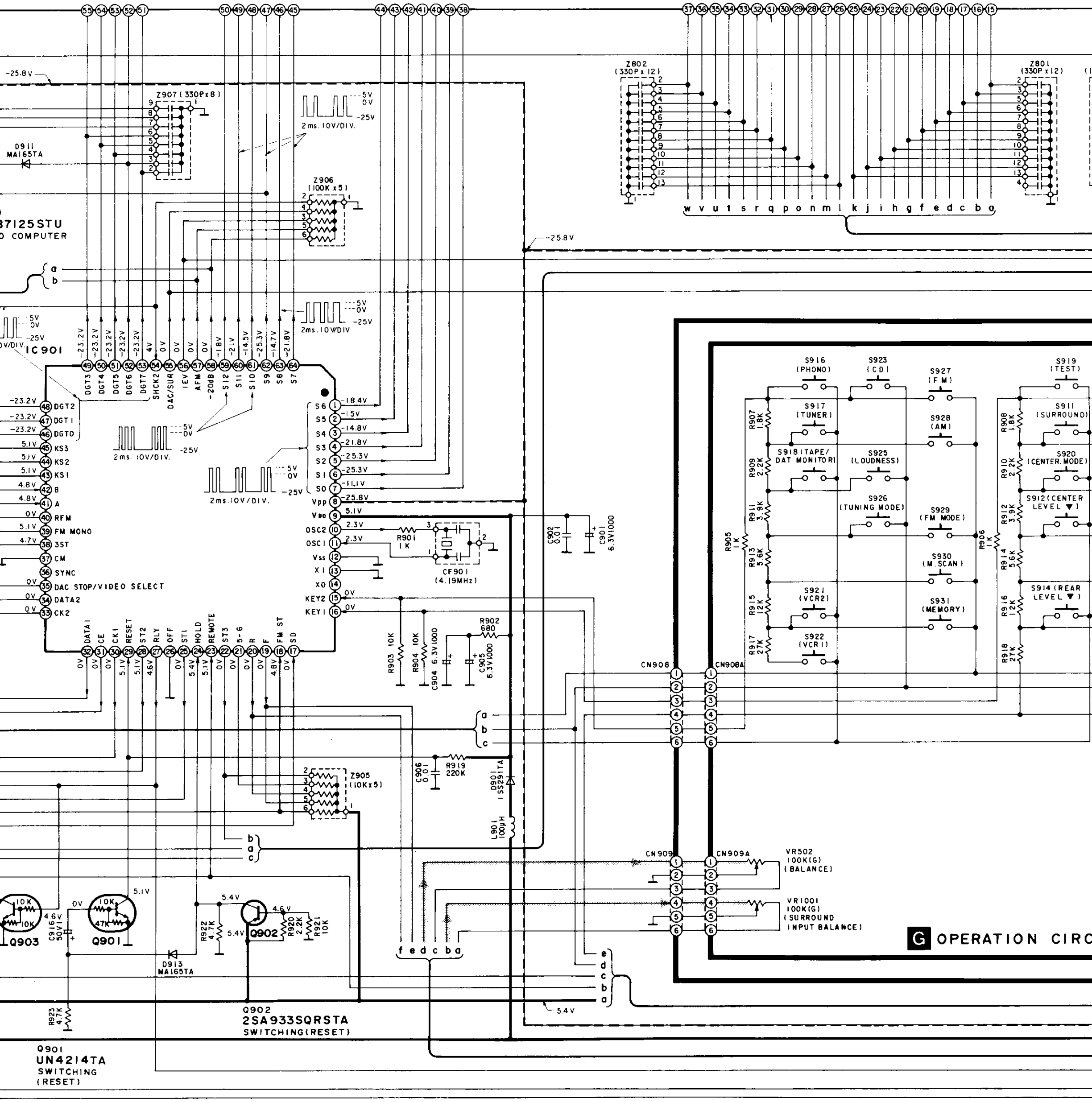

10 11 12 13 14

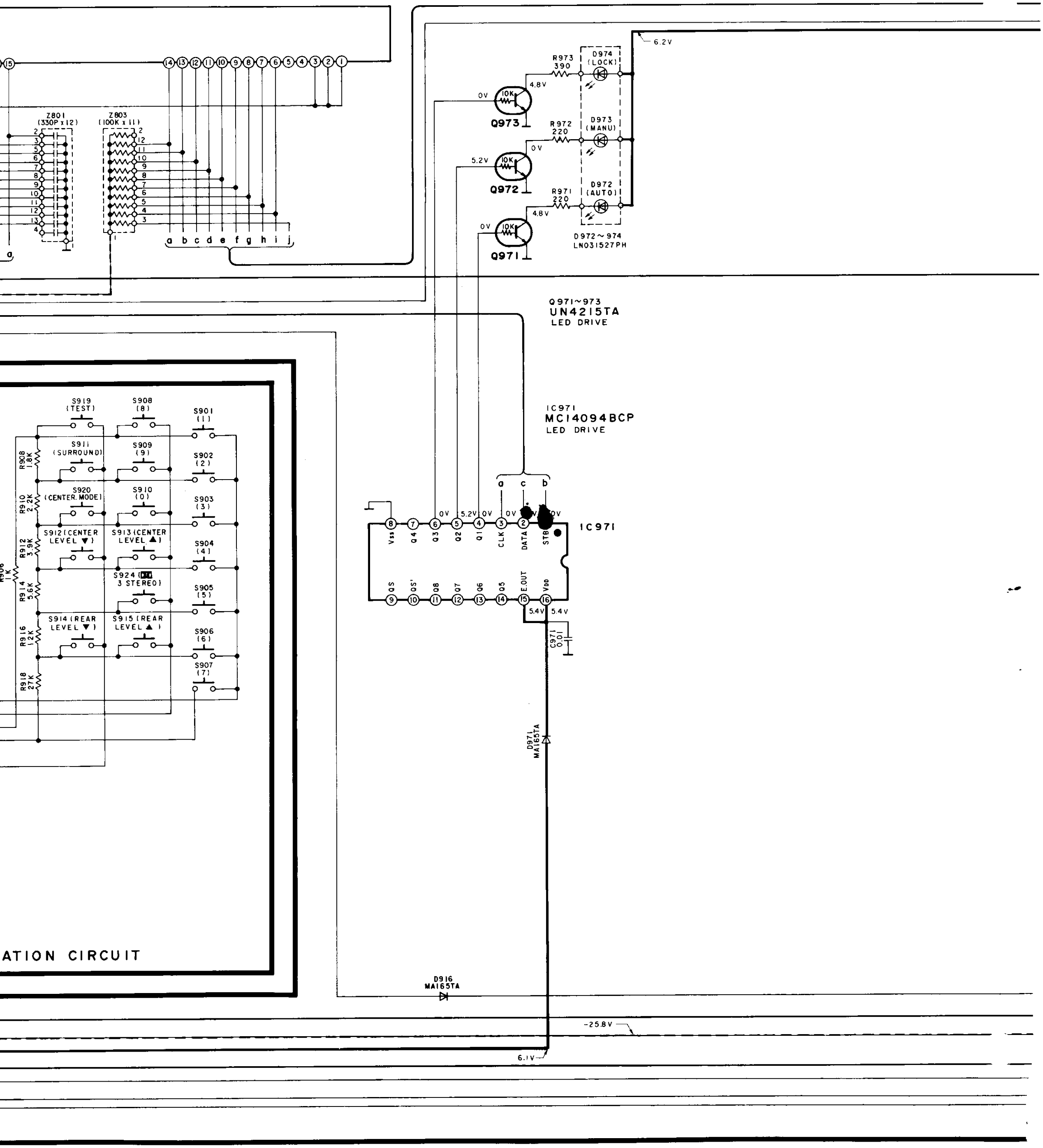
Z801
(330P x 12)
Z803
(100K x 11)
a b c d e f g h i j
R973
390
D974
(LOCK)
6.2V
4.8V
0V
10K
Q973
R972
220
D973
(MANU)
5.2V
Q972
R971
220
D972
(AUTO)
Q971
D972~974
LN031527PH
Q971~973
UN4215TA
LED DRIVE
IC971
MC14094BCP
LED DRIVE
a c b
Vss Q4 Q3 Q2 Q1 CLK DATA STB
QS QS' Q8 Q7 Q6 Q5 E.OUT VDD
5.4V
C971
0.01
D971
MA165TA
S919
(TEST)
S908
(8)
S901
(1)
S911
(SURROUND)
S909
(9)
S902
(2)
S920
(CENTER MODE)
S910
(0)
S903
(3)
S912 (CENTER
LEVEL ▼)
S913 (CENTER
LEVEL ▲)
S904
(4)
S924 (DEMO
3 STEREO)
S905
(5)
S914 (REAR
LEVEL ▼)
S915 (REAR
LEVEL ▲)
S906
(6)
S907
(7)
R908
1.8K
R910
2.2K
R912
3.9K
R914
5.6K
R916
1.2K
R918
27K
ATION CIRCUIT
D916
MA165TA
-25.8V
6.1V

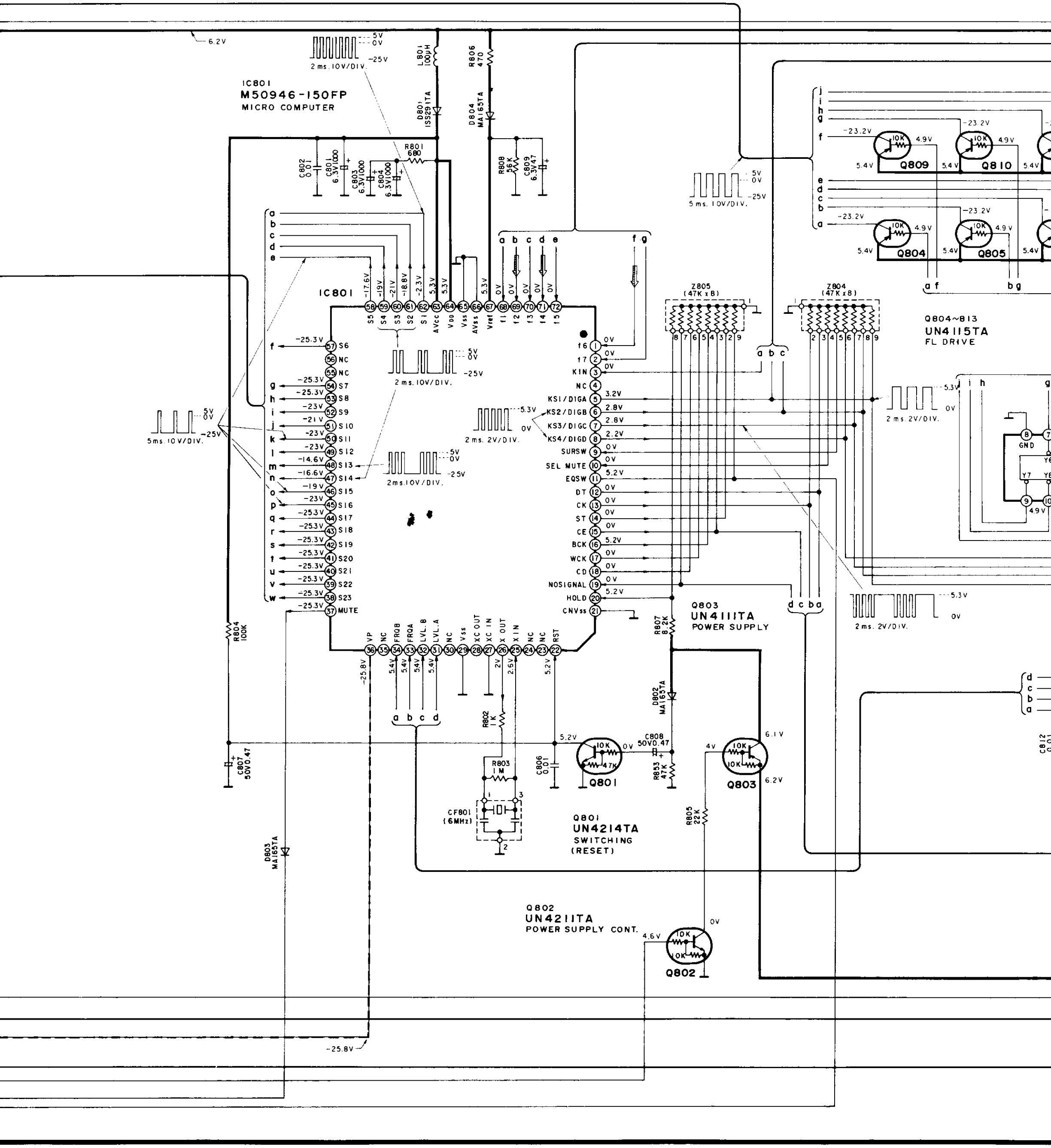
IC801
M50946-150FP
MICRO COMPUTER
6.2V
2 ms. 10V/DIV.
L801 100μH
R806 470
D801 ISS291TA
D804 MA165TA
C802 0.01
C801 6.3V1000
C803 6.3V1000
C804 6.3V1000
R801 680
R808 56K
C809 6.3V47
5 ms. 10V/DIV.
Q809
Q810
Q804
Q805
Z805 (47K x 8)
Z804 (47K x 8)
Q804~813
UN4115TA
FL DRIVE
5 ms. 10V/DIV.
2 ms. 10V/DIV.
2 ms. 2V/DIV.
KIN
KS1/DIGA
KS2/DIGB
KS3/DIGC
KS4/DIGD
SURSW
SEL MUTE
EQSW
DT
CK
ST
CE
BCK
WCK
CD
NOSIGNAL
HOLD
CNVss
MUTE
R804 100K
R807 8.2K
D802 MA165TA
R802 1K
R803 1M
C806 0.01
C807 50V0.47
C808 50V0.47
R853 47K
Q801
Q803
UN4111TA
POWER SUPPLY
CF801 (6MHz)
Q801
UN4214TA
SWITCHING
(RESET)
R805 22K
D803 MA165TA
Q802
UN4211TA
POWER SUPPLY CONT.
-25.8V

H P.EQ/TONE CIRCUIT

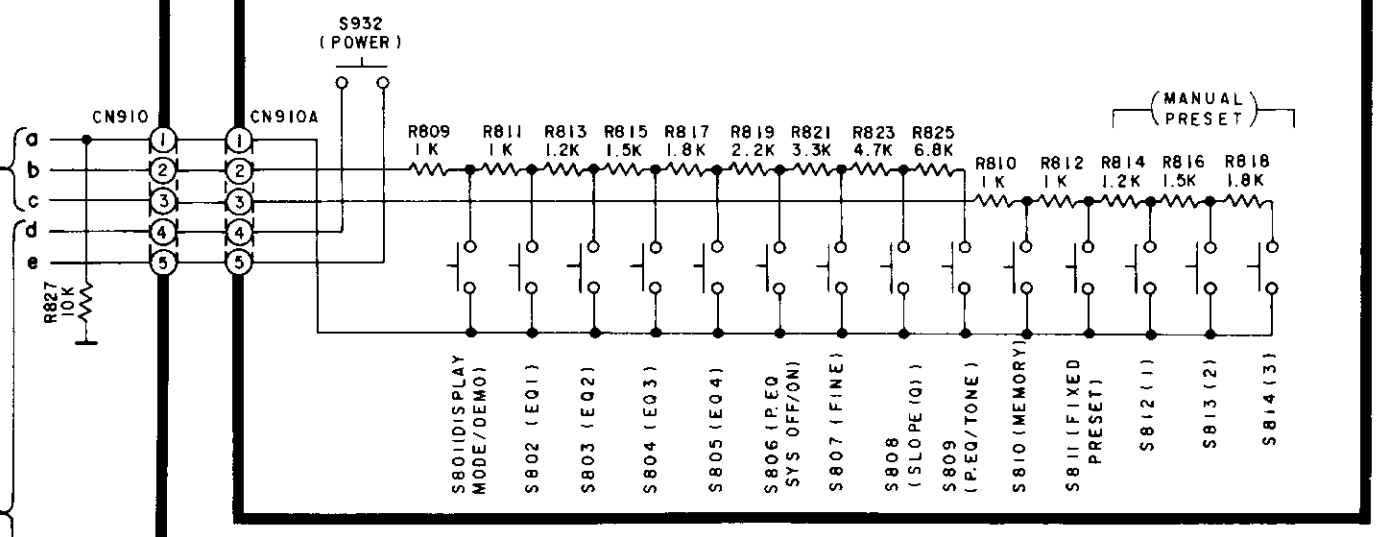

I REMOTE SENSOR CIRCUIT

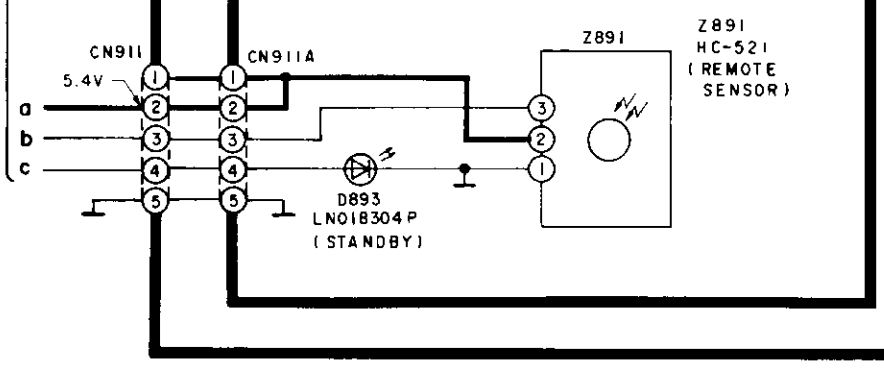

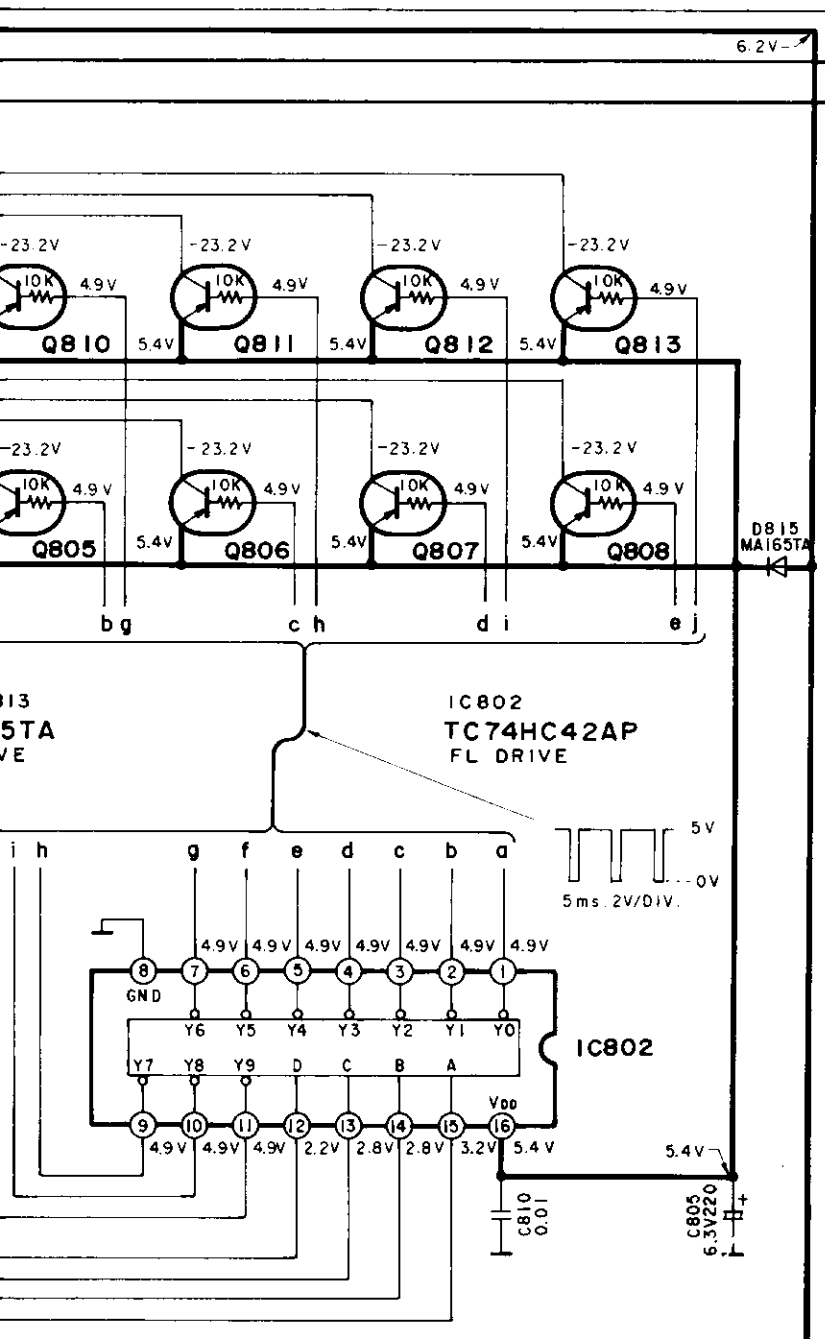

Q814, 815
UN4211TA
SWITCHING
(LOUDNESS)

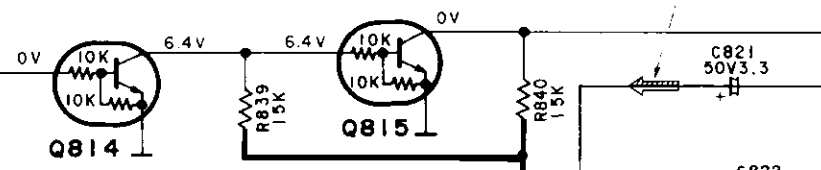

Spectrum analyzer signal

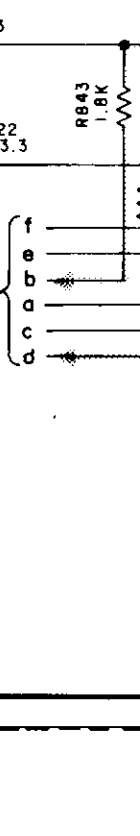

IC803
XR-1091DCP
SPECTRUM
ANALYZER B.P.F.

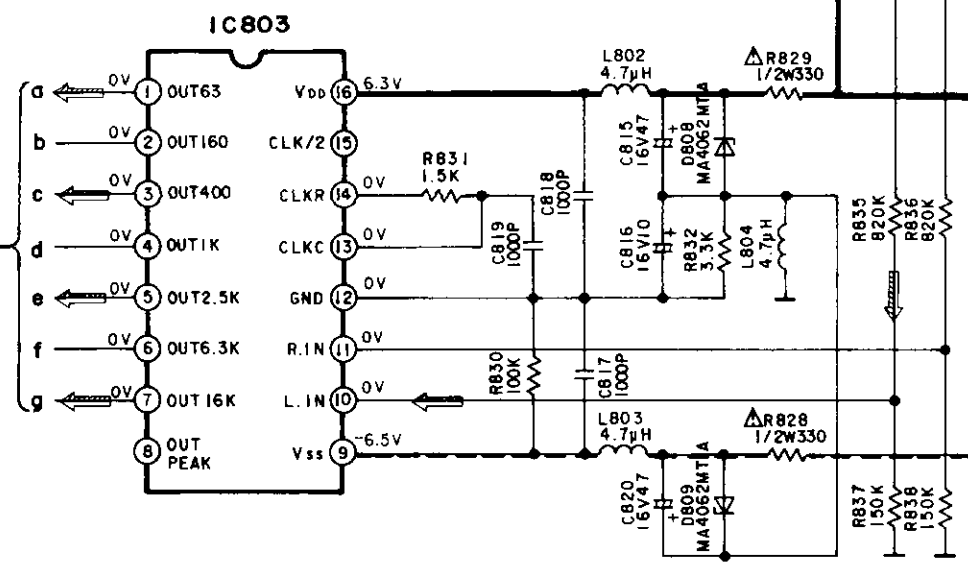

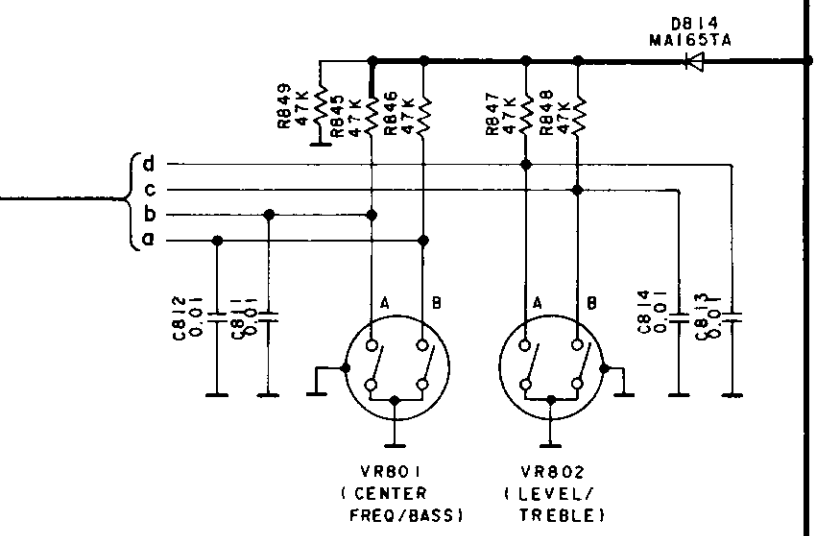

6.2V

J VOLUME CIRCUIT

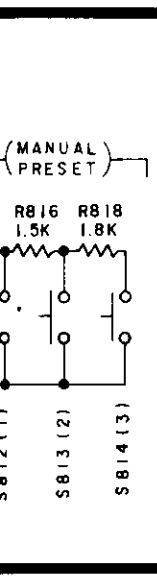

SENSOR

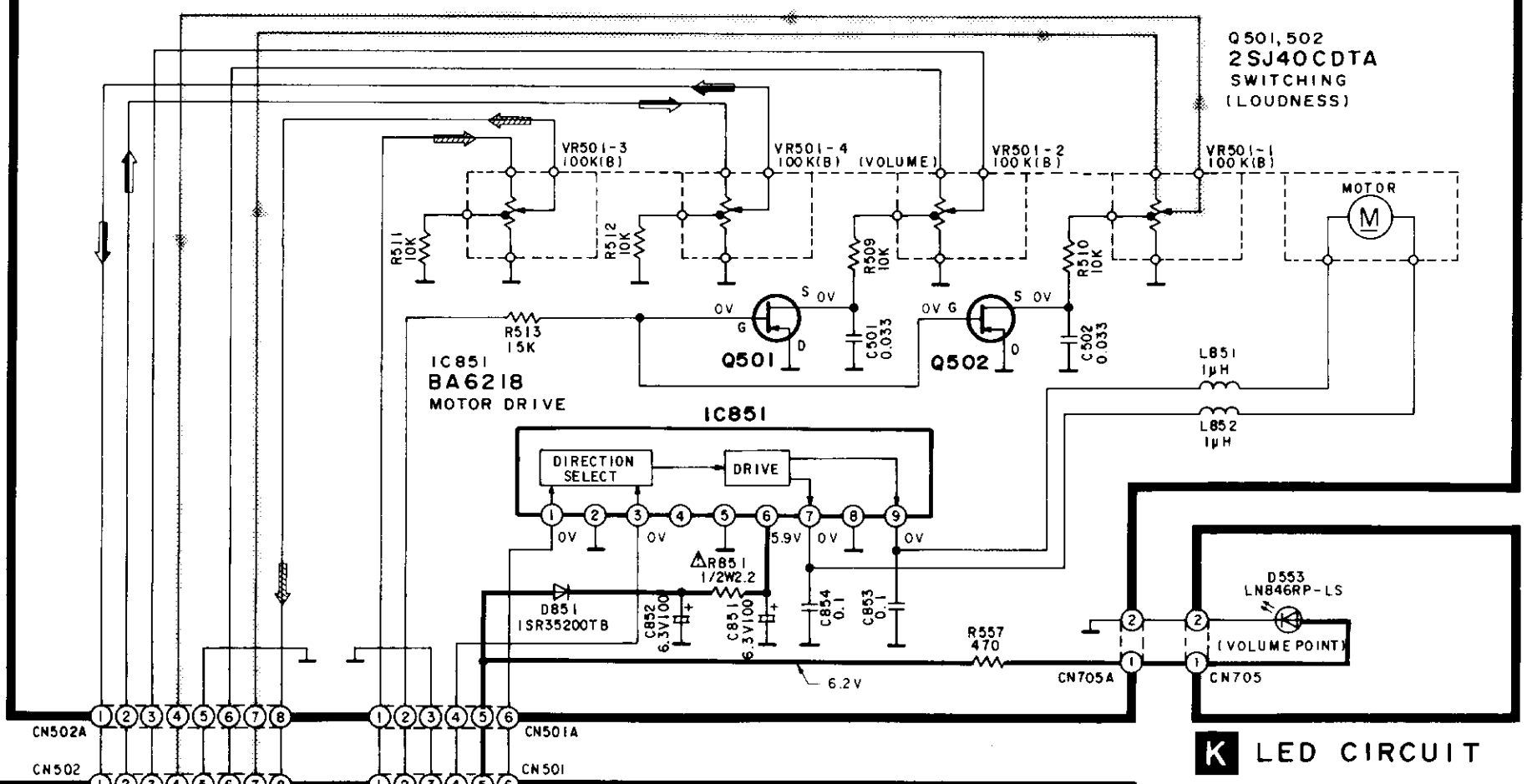

K LED CIRCUIT

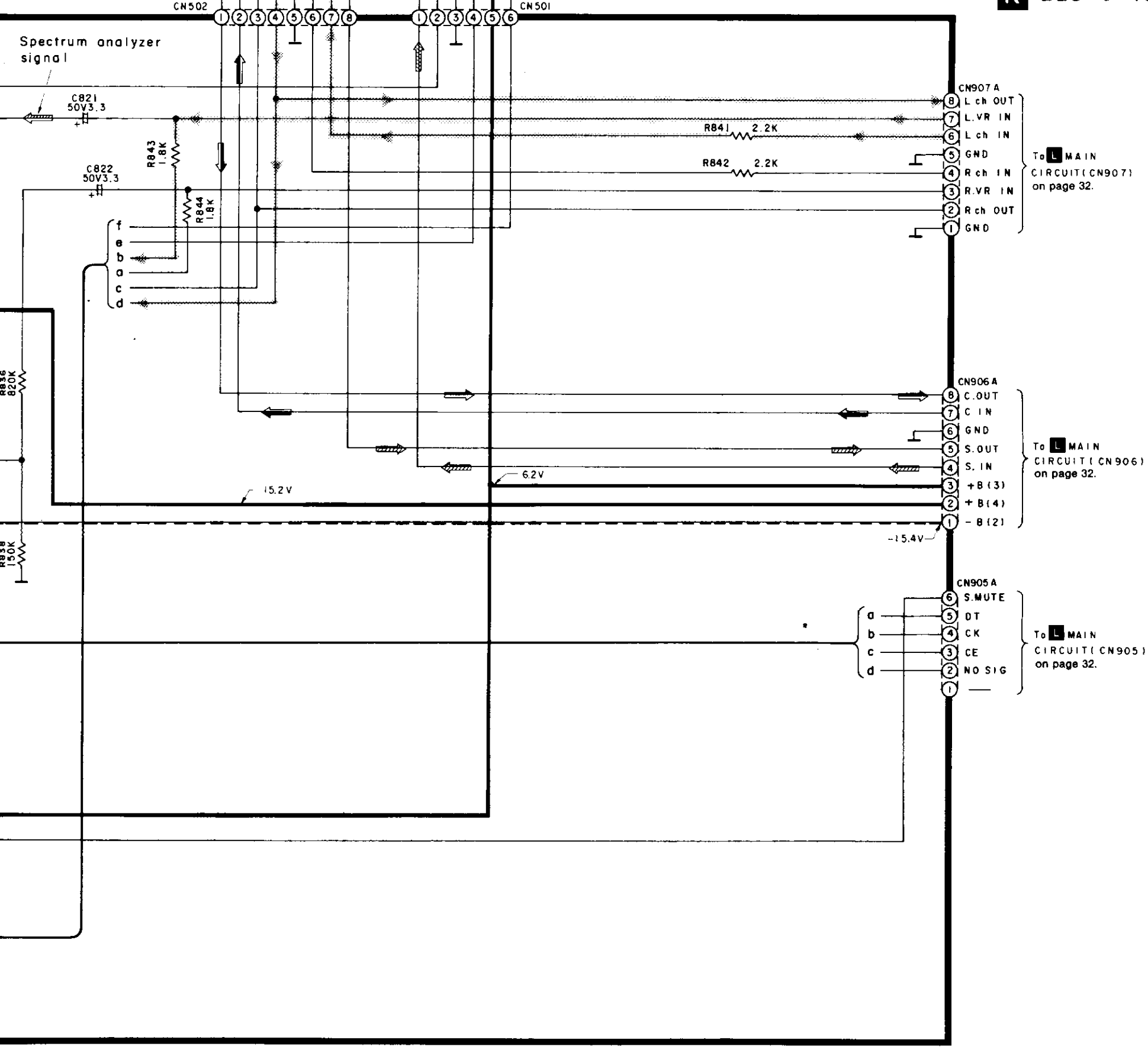

L MAIN CIRCUIT

CN351
+B(7) 7 — 15.2V
CONT 6
GND 5
GND 4
GND 3
GND 2
+B(2) 1 — 5.7V

To B VIDEO CIRCUIT (CN351A) on page 28.

AUDIO

GND

JK401
L ch
PHONO
R ch

R451 820 — C451 35V4.7 — R457 270
R452 820 — C452 35V4.7 — R458 270
R453 220K — R455 56K — C453 100P — C463 6.3V33
R454 220K — R456 56K — C454 100P — C464 6.3V33
C407 6.3V100

R459 68 — R461 180K — C457 0.022 — R463 12K — C459 6800P — C461 35V4.7 — R467 1K

C455 1000P — C456 1000P

R460 68 — C458 0.022 — C460 6800P — R462 180K — R464 12K — C462 35V4.7

R468 1K

IC451
AN6558F
PHONO EQ AMP

C409 0.01 — R465 56K — C406 100P
C408 0.01 — C410 16V22 — R466 56K

IC501
M5238P
BUFFER AMP

R504 1K — C504 100P — R506 47K — C506 16V47
C421 16V22 — C503 100P — R505 47K — C505 16V47
R503 1K
C533 35V4.7
R507 100K

JK401
L ch — R401 3.3K — R403 8.2K
CD
R ch — R402 3.3K — R404 8.2K

JK404
L ch — R419 1K
VCR2
R ch — R420 1K

JK404
L ch — R415 1K
OUTPUT
R ch — R416 1K

VCR1

JK405
L ch — R417 1K
INPUT
R ch — R418 1K

JK402
L ch — R411 1K
REC OUT
R ch — R412 1K

TAPE / DAT

L ch — R413 1K
PLAYBACK
R ch — R414 1K

-15.4V

R406 47 — C402 0.01

IC401 (TC9163N, INPUT SELECTOR)
28 VDD 15.1V — 27 X1 — 26 X2 — 25 X3 — 24 — 23 X4 — 22 X5 — 21 X6 — 20 — 19 X7 — 18 X8 — 17 — 16 DATA — 15 CLK
1 Vss -15.3V — 2 X1 — 3 X2 — 4 X3 — 5 — 6 X4 — 7 X5 — 8 X6 — 9 — 10 X7 — 11 X8 — 12 — 13 STB — 14 GND

R405 47 — C401 0.01

R430 10K — R429 10K
R109 100K — R110 100K — R111 100K
Q103 (10K, 47K)
Q104 (10K, 47K)

Q103, 104
UN4214TA
SWITCHING

C405 100P — R431 10K

Rec out signal

JK409
REOMOTE CONTROL OUT
C891 3900P

E401

CN202
1 RFM — 2 SD — 3 Rch IN — 4 Lch IN — 5 GND — 6 FM ST — 7 FM MONO

To A TUNER CIRCUIT (CN202A) on page 29.

CN201
1 GND — 2 +B(6) — 5.6V

To A CIRC on pa

5 6 7 8 9 10

IC501
M5238P
BUFFER AMP

IC503
M5238P
MIXING AMP

IC502
AN6558F
FLAT AMP

Q505,506
2SA1309AQSTA
MUTING CONT.

Q103,104
UN4214TA
SWITCHING

Q508
UN4211TA
SWITCHING

Q509,510,513
2SC1740SQSTA
SWITCHING

D501 MA700ATA
D502 MA165TA
D504 MA165TA

To A TUNER CIRCUIT (CN201A) on page 29.

To F FL DRIVE CIRCUIT (CN903A) on page 36.

To F FL DRIVE CIRCUIT (CN902A) on page 36.

To F FL DRIVE CIRCUIT (CN901A) on page 36.

To F FL DRIVE CIRCUIT (CN905A) on page 41.

10 11 12 13 14

15.2V
5.7V
D505 MA165TA
6.2V
c
b
a
-15.4V

Q503,504,511,512
2SC3327ABTP
MUTING

Q895,897
2SB1240PRTV6
POWER SUPPLY

R514 390K
R531 390K
C519 50V3.3
R523 2.2K
R525 220
R521 39K
R527 1K -14.4V
0V
R529 1K -14.4V
0V
Q511
Q503
Q512
Q504
-14.4V
R528 1K
0V
-14.4V
R530 1K
0V
R522 39K
R526 220
C520 50V3.3
R524 2.2K
R532 10K
-14.4V
0V
-14.4V
0V
D503 MA165TA
Q506
Q505
C521 0.01
R535 100K
R534 10K
C522 0.01
R533 100K
6
09AQSTA
CONT.

15.2V
15.2V
Q897
14.4V
R897 220
R896 2.2K
D895 MA165TA
6.2V
6.2V
7.9V
R899 47K
R893 33K
0.5V
Q895
5.4V
D894 MA165TA
C892 6.3V47
R898 22K
Q896
R895 10K
R894 1K
0V
4.6V
10K
10K
Q894

Q896
2SC1740SQSTA
POWER SUPPLY CONTROL

R601 1K
C601 35V4.7
R602 1K
C602 35V4.7
C603 270P
R603 56K
C604 270P
R604 56K

Q894
UN42IITA
POWER SUPPLY CONT.

C532 0.01
R422 2.2K
R421 2.2K

-25.8V
6.1V
6.2V
-15.4V
15.2V

a b c

JK408
CENTER OUT

CN907: GND, Rch IN, R.VR OUT, Rch OUT, GND, Lch OUT, L.VR OUT, Lch IN
CN906: -B(2), +B(4), +B(3), S.OUT, S.IN, GND, C.OUT, C.IN
NO SIG, CE, CK, DT, S.MUTE

To F FL DRIVE CIRCUIT (CN905A) on page 41.
To F FL DRIVE CIRCUIT (CN907A) on page 41.
To F FL DRIVE CIRCUIT (CN906A) on page 41.

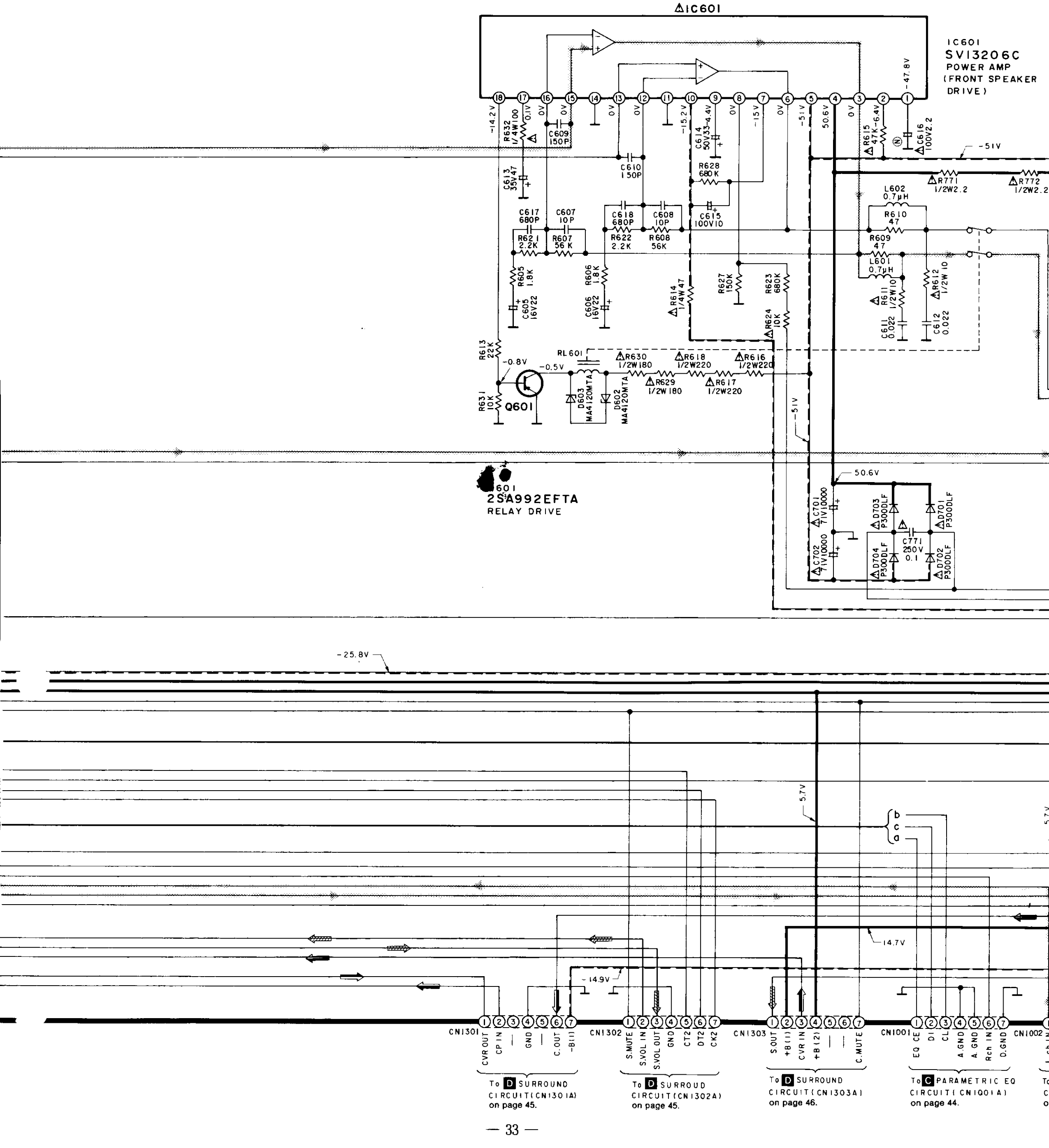
IC601
IC601
SV13206C
POWER AMP
(FRONT SPEAKER
DRIVE)
-47.8V
-14.2V
0.1V
0V
-15.2V
-15V
-51V
50.6V
-6.4V
R632 1/4W100
C609 150P
C613 35V47
C610 150P
C614 50V33-4.4V
R628 680K
R615 47K
C616 100V2.2
-51V
R771 1/2W2.2
R772 1/2W2.2
L602 0.7μH
R610 47
R609 47
L601 0.7μH
C617 680P
C607 10P
C618 680P
C608 10P
C615 100V10
R621 2.2K
R607 56K
R622 2.2K
R608 56K
R605 1.8K
R606 1.8K
C605 16V22
C606 16V22
R614 1/4W47
R627 150K
R623 680K
R624 10K
R611 1/2W10
C611 0.022
R612 1/2W10
C612 0.022
R613 22K
RL601
R630 1/2W180
R618 1/2W220
R616 1/2W220
-0.8V
-0.5V
R629 1/2W180
R617 1/2W220
R631 10K
Q601
D603 MA4120MTA
D602 MA4120MTA
-51V
50.6V
C701 71V10000
C702 71V10000
D703 P3000LF
D701 P3000LF
C771 250V 0.1
D704 P3000LF
D702 P3000LF
601
2SA992EFTA
RELAY DRIVE
-25.8V
5.7V
14.7V
-14.9V
CN1301
CVR OUT
CP IN
—
GND
—
C.OUT
-B(1)
CN1302
S.MUTE
S.VOL IN
S.VOL OUT
GND
CT2
DT2
CK2
CN1303
S.OUT
+B(1)
CVR IN
+B(2)
—
—
C.MUTE
CN1001
EQ CE
DI
CL
A.GND
A.GND
Rch IN
D.GND
CN1002
To D SURROUND CIRCUIT(CN1301A) on page 45.
To D SURROUD CIRCUIT(CN1302A) on page 45.
To D SURROUND CIRCUIT(CN1303A) on page 46.
To C PARAMETRIC EQ CIRCUIT(CN1001A) on page 44.

Q708, 710
2SB1187DEF
REGULATOR

Q709
2SC2631QRSTA
REGULATOR

Q701, 702
2SD1761DEF
REGULATOR

Q703
2SC2631QRSTA
REGULATOR

Q704
2SC3311AQSTA
STABILIZER

Q705
2SC3940AQSTA
REGULATOR

Q713
2SC3311AQSTA
STABILIZER

Q752
2SC3940AQSTA
REGULATOR

Q751
2SC1740SQSTA
RELAY DRIVE

M POWER SUPPLY CIRCUIT

N SPEAKER IMPEDANCE SWITCH CIRCUIT

O FUSE CIRCUIT

To C PARAMETRIC EQ CIRCUIT (CN1002A) on page 43.

To C PARAMETRIC EQ CIRCUIT (CN1003A) on page 42.

To C PARAMETRIC EQ CIRCUIT (CN1004A) on page 42.

To D SURROUND CIRCUIT (CN703C,D) on page 46.

25 26 28 29 30

-0.8V
Q652
-15.4V
R657 10K
-15.4V
R658 22K
-15.4V
Q651
0V
R656 10K
D651 MA165TA
R662 100K
C651 50V2.2
R655 3.9K
R651 22K
R652 22K
R653 22K
R654 22K
△R659 1/2W 22
△R660 1/2W22
△R661 1/2W 22
D652 MA4068MTA
JK651
FAN MOTOR
JK601
L ch
R ch
A
FRONT
JK602
L ch
R ch
B
SPEAKERS
JK603
L ch
R ch
REAR
JK604
CENTER
b
c
a
d
CN601
W602
W601
CN602B
CN602A
P SPEAKER SWITCH CIRCUIT
S601-2 (SPEAKER B)
on
off
R620 2W 330
R619 2W 330
S601-1 (SPEAKER A)
R
L
E
HP601 HEADPHONES

Q652
2SC3311AQSTA
MOTOR DRIVE

Q651
2SA1309AQSTA
MOTOR DRIVE

△C791 0.01
△R791 1/2W3.3M
△F1 125V6A
△T701
△F3 125V2.5A
△F2 125V2.5A

SE CIRCUIT

△JK791 (SWITCHED)
△JK792 (SWITCHED)
(AC OUTLETS)
△JK793
AC 120V (60Hz)

Q AC IN/AC OUTLETS CIRCUIT

D SURROUND CIRCUIT

To L MAIN CI
on page 33.

CN1301A CVR IN, CP OUT

IC1401
TA7629P
DOLBY B NR

IC1402

IC1403
TC9212P
ATTENUATOR

IC1402, 1404
AN6554F
BUFFER AMP

IC1404

To L MAIN CIRCUIT (CN 1302) on page 33.

CN1302A
CK2 (7)
DT2 (6)
CT2 (5)
GND (4)
S. VOL IN (3)
S. VOL OUT (2)
S. MUTE (1)

Q1304

Q1303

Q1302
0.3V

Q1301

Q1302, 1304
2SA1309AQSTA
MUTING CONT.

Q1301, 1303
2SC3327ABTP
MUTING

IC1301
SV1310IC
POWER AMP
(REAR / CENTER)

⚠ IC1301

20 21 22 23 24

To L MAIN CIRCUIT(CN1301) on page 33.

To L MAIN CIRCUIT(CN1303) on page 33.

CN1301A CVR IN CP OUT — GND — C. IN -B(1)

CN1303A S. IN +B(1) CVROUT +B(2) — — C. MUTE

5.7V

14.7V

-14.9V

14.7V

D1402 MA165TA

L1401 100μH

C1441 6.3V22

R1480 1K

R1481 100K

C1485 16V10

R1484 2.2K

R1431 1M

X1401 (3MHz)

R1449 1K

C1415 0.1

C1416 6.3V220

IC1405

12	11	10	9	8	7	6	5	4	3	2	1	
A. GND	D. GND	MUTE SEL	MUTE	MODE	DEL 4	DEL 3	DEL 2	DEL 1	OSC OUT	OSC IN	D. Vdd	
5V									1.9V	1.9V	5V	
13	14	15	16	17	18	19	20	21	22	23	24	
LPF2 OUT	LPF2 IN	OP2 OUT	OP2 IN	CC2	CC1	REF	OPI IN	OPI OUT	LPFI OUT	LPFI IN	A.Vcc	
2.2V	2.2V	2.2V	2.2V	0.5V	0.5V	2.2V	2.2V	2.2V	2.2V	2.2V	5V	

IC1405
M50198P
DIGITAL DELAY

C1414 0.012 — R1411 2.7K — C1413 50V1 — C1412 560P — C1410 0.1 — C1409 0.1 — C1408 0.1 — C1407 16V47 — C1406 0.1 — C1405 560P

R1410 15K — R1409 15K — R1408 15K — R1407 15K — R1406 15K

C1411 3300P

R1434 8.2K — C1403 50V1 — R1405 15K

R1435 10K — C1404 3300P

CN703D
7 AC
6 AC
5 GND
4 C. OUT
3 GND
2 S. OUT
1 GND
CN703C

To L MAIN CIRCUIT (W703) on page 34.

R1308 56K — C1309 10P — C1310 10P — R1307 56K

R1424 1/4W 47 — R1309 3.3K — C1307 50V22

C1311 100V10 — R1311 680K

R1310 3.3K — C1308 50V22

R1314 150K — R1313 560K

C1305 820P

R1328 1/4W 47 — C1312 63V22

R1315 1/4W 47 — C1313 0.022 — R1316 1/4W 47 — C1314 0.022

0V	0V	0V	-15.4V	-4.5V	0V	-14.2V	0V	-18.8V	18.6V	0V	
12	11	10	9	8	7	6	5	4	3	2	1
GND	GND	-Vcc	L MUTE	ACIN	LATCH				-Vcc	+Vcc	OUT

C1315 35V3300 — C1316 35V3300

D1301 GP15GLF — D1303 GP15GLF — D1302 GP15GLF — D1304 GP15GLF

C1317 500V0.01

18.6V

-18.8V

301

■ SCHEMATIC DIAGRAM

(Parts list on pages 59～66.)

Note 1:

- S601 : Speaker selectors (SPEAKERS) switches. [S601-1: A, S601-2: B]
- S702 : Speaker impedance selector
- S801 : Display mode select (-DISPLAY MODE, -DEMO) switch.
- S802～805: Parametric EQ band switches. [S802: EQ1, S803: EQ2, S804: EQ3 S805: EQ4]
- S806 : Parametric EQ system ON/OFF (P. EQ SYS) switch.
- S807 : Fine mode (FINE) switch.
- S808 : Slope changeover [SLOPE (Q)] switch.
- S809 : Parametric EQ/tone mode select (P. EQ/TONE) switch.
- S810 : Parametric EQ system memory (MEMORY) switch.
- S811 : Fixed preset (FIXED PRESET) switch.
- S812～814: Equalization preset (MANUAL PRESET) switches. [S812: 1, S813: 2, S814: 3]
- S901～910: Preset-tuning (1-0) (30 CHANNEL RANDOM PRESET TUNING) switches. [S901: 1, S902: 2, S903: 3, S904: 4, S905: 5, S906: 6, S907: 7, S908: 8, S909: 9, S910: 0]
- S911 : Dolby surround ON/OFF (SURROUND) switch.
- S912, 913 : Center speaker level adjustment (CENTER LEVEL) switches. [S912: ▼, S913: ▲]
- S914, 915 : Rear speaker level adjustment (REAR LEVEL) switches. [S914: ▼, S915: ▲]
- S916, 917, 921～923 : Input selector switches. [S916: PHONO, S917: TUNER, S921: VCR2 S922: VCR1, S923: CD]
- S918 : Tape-monitor (TAPE/DAT MONITOR) switch.
- S919 : Test signal (TEST) switch.
- S920 : Center mode select (CENTER MODE) switch.
- S924 : Dolby 3 stereo ON/OFF (3 STEREO) switch.
- S925 : Loudness (LOUDNESS) switch.
- S926 : Tuning- mode selector (TUNING MODE) switch. [AUTO↔MANUAL↔LOCK]
- S927, 928 : Band selector switches. [S927: FM, S928: AM]
- S929 : FM mode selector (FM MODE) switch.
- S930 : Memory scan (MEMORY SCAN) switch.
- S931 : Memory (MEMORY) switch.
- S932 : Power " ⏻ STANDBY/ON" switch.

- Signal line
  - : FM OSC
  - : AM OSC
  - : Rec out signal (Lch)
  - : Spectrum analyzer signal (Lch)
  - : Rear speaker drive signal (Lch)
  - : P. equalizer signal (Lch)
  - : Positive voltage lines
  - : Negative voltage lines
  - : FM signal
  - : AM signal
  - : AF signal (Lch)
  - : Center speaker drive signal

- All voltage values shown in circuitry are DC voltage in FM signal (Stereo signal) reception mode.
- ＊Figures in ( ) Stand for DC-voltage in AM signal reception mode.

- The supply part number is described alone in the replacement parts list.

Ref. No.	Production Part No.	Supply Part No.
IC301	AN7470	SVIUPC1161C3
IC501, 503	M5238P	M5238P-1

＊Caution!

IC and LSI are sensitive to static electricity.
Secondary trouble can be prevented by taking care during repair.

＊ Cover the parts boxes made of plastics with alminum foil.
＊ Ground the soldering iron.
＊ Put a conductive mat on the work table.
＊ Do not touch the legs of IC or LSI with the fingers directly.

Note 2:

- **Use of ceramic filters in pairs**

The ceramic filters (CF201, CF202) for FM-IF circuit are available in three ranks. For this circuit, be sure to use the ceramics of the same rank in a pair.
At repairing and replacement, pay close attention to the short jumpers (J956, J957) for use as different short jumpers must be used depending on each rank of the ceramic filters.

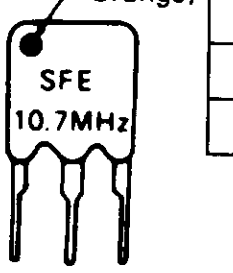

RANK (Color)	J956 (BL)	J957 (OR)	CENTER FREQUENCY
Blue	○	×	10.675MHz
Red	○	○	10.700MHz
Orange	×	○	10.725MHz

Note: ○ mark: short jumper is used.
× mark: short jumper is not used.

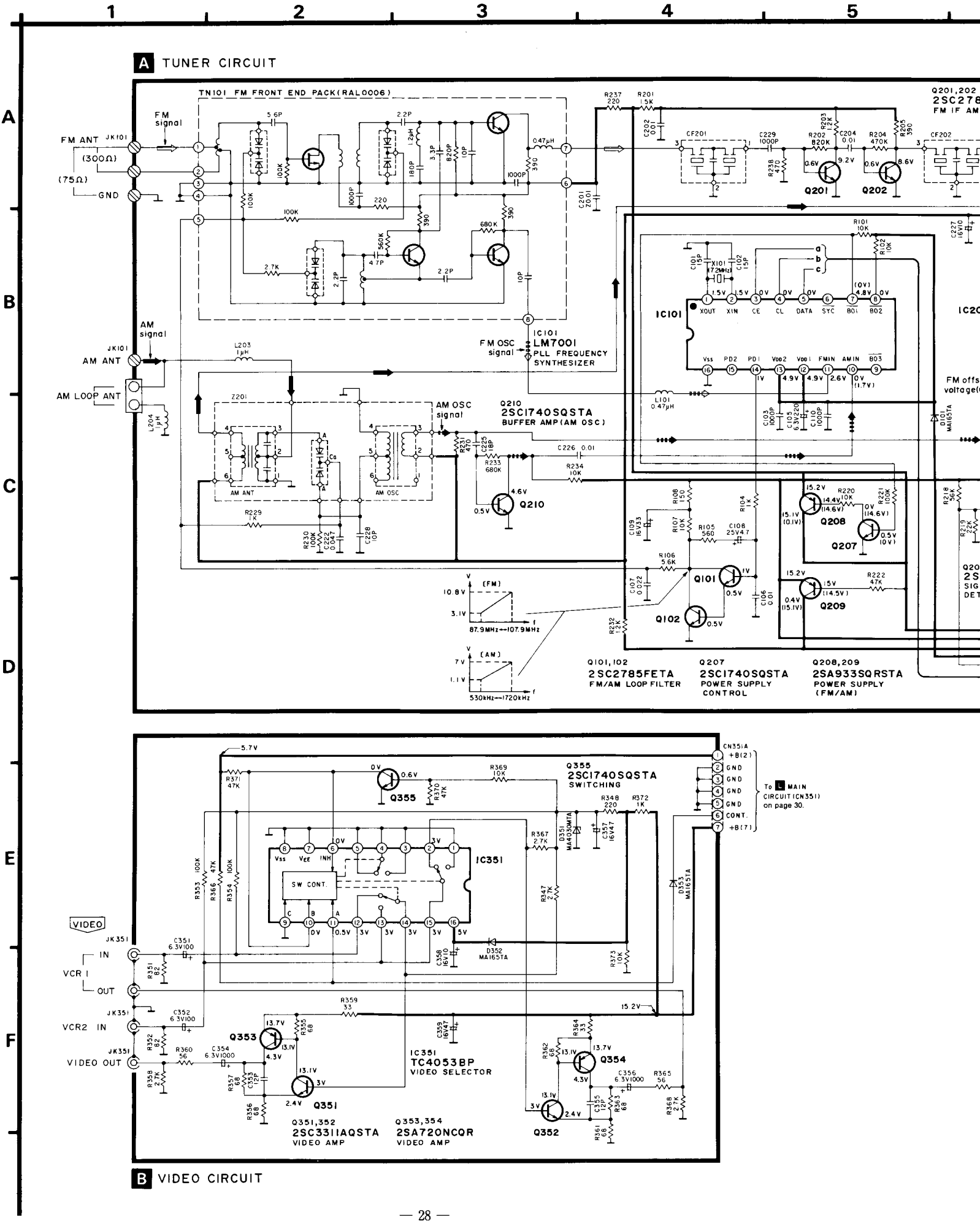
A TUNER CIRCUIT
TN101 FM FRONT END PACK(RAL0006)
FM signal
FM ANT
JK101
(300Ω)
(75Ω)
GND
AM signal
AM ANT
AM LOOP ANT
IC101
LM7001
PLL FREQUENCY SYNTHESIZER
FM OSC signal
AM OSC signal
Q210
2SC1740SQSTA
BUFFER AMP(AM OSC)
Q201,202
2SC278
FM IF AM
Q101,102
2SC2785FETA
FM/AM LOOP FILTER
Q207
2SC1740SQSTA
POWER SUPPLY CONTROL
Q208,209
2SA933SQRSTA
POWER SUPPLY (FM/AM)
87.9MHz←107.9MHz
530kHz←1720kHz
Q355
2SC1740SQSTA
SWITCHING
IC351
TC4053BP
VIDEO SELECTOR
Q351,352
2SC3311AQSTA
VIDEO AMP
Q353,354
2SA720NCQR
VIDEO AMP
VIDEO
VCR 1
VCR2 IN
VIDEO OUT
To L MAIN CIRCUIT (CN351) on page 30.
B VIDEO CIRCUIT

5 6 7 8 9

Q201,202
2SC2787LTA
FM IF AMP

IC201
AN7273A
FM/AM IF AMP, DET.
& AM MIXER

Q204
2SCI740SQSTA
SWITCHING
(FM:ON)

IC301
AN7470
FM MPX

AF signal
(L ch)

IC201

IC301

Q202

Q206

Q205

Q204

Q301

Q302

Q303

Z202

T201

T202

TP202

TP201

TP301

D101 MA165TA

D204 MA165TA

D206 MA165TA

D301 MA165TA

FM offset voltage(0mV)

FM offset adj.

FM mono distortion adj.

FM MPX VCO adj.

FM MPX VCO adj. (19kHz output)

Q205,206
2SCI740SQSTA
SIGNAL DETECTOR

Q301,302
2SDI450QRSTA
MUTING

Q303
2SA933SQRSTA
MUTING CONT.

AM/FM IF AMP
DET
AF AMP
AM MIX
MPX
PLL

15.2V
5.6V

CN202A
RFM
SD
R ch OUT
L ch OUT
GND
FM STEREO
FM MONO

To L MAIN CIRCUIT(CN202) on page 30.

CN201A
GND
+B (6)
DATA I
CK I
CE
+B (4)
GND

To L MAIN CIRCUIT(CN201) on page 31.

■ EXPLODED VIEWS

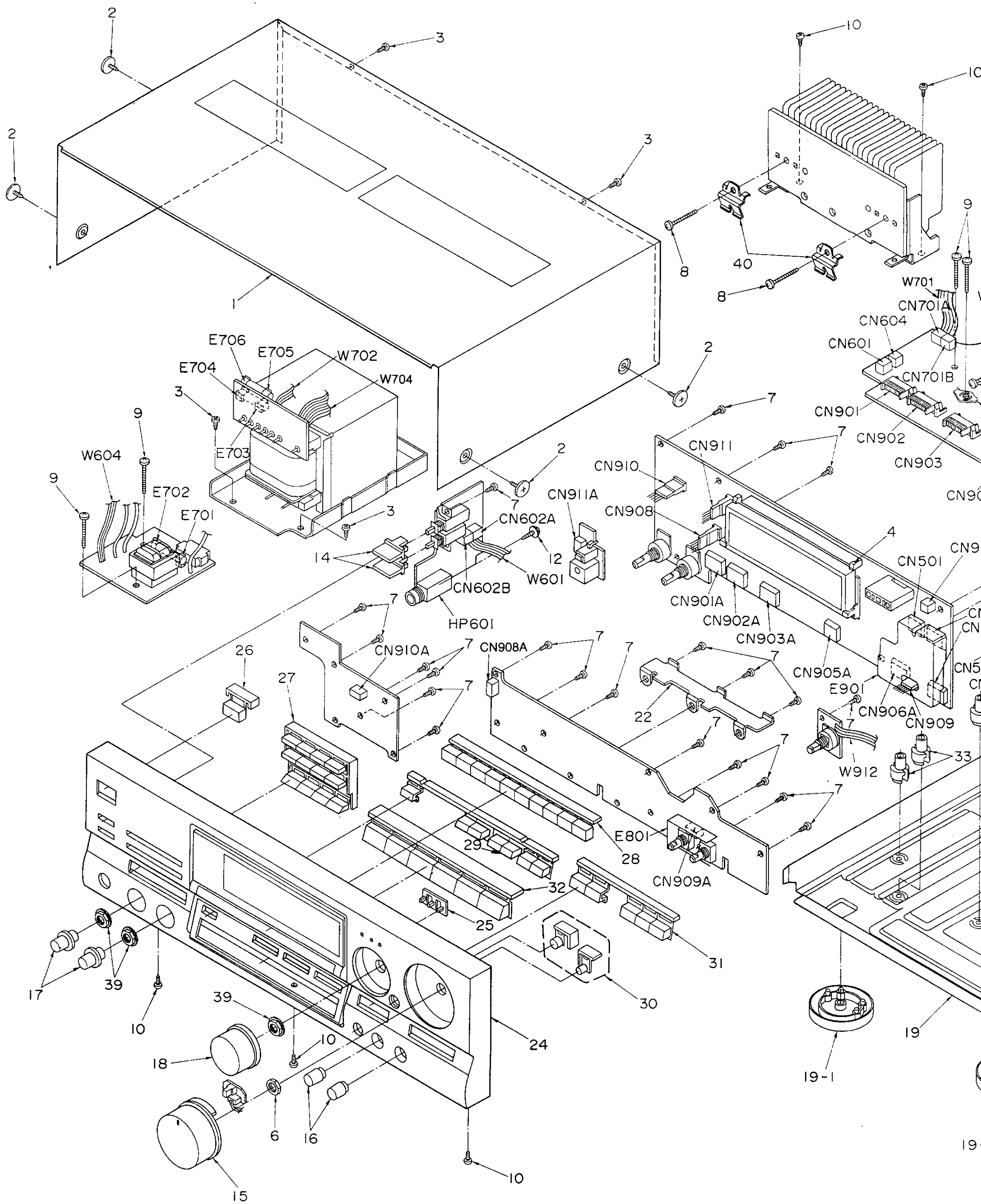

5 6 7 8 9

RE

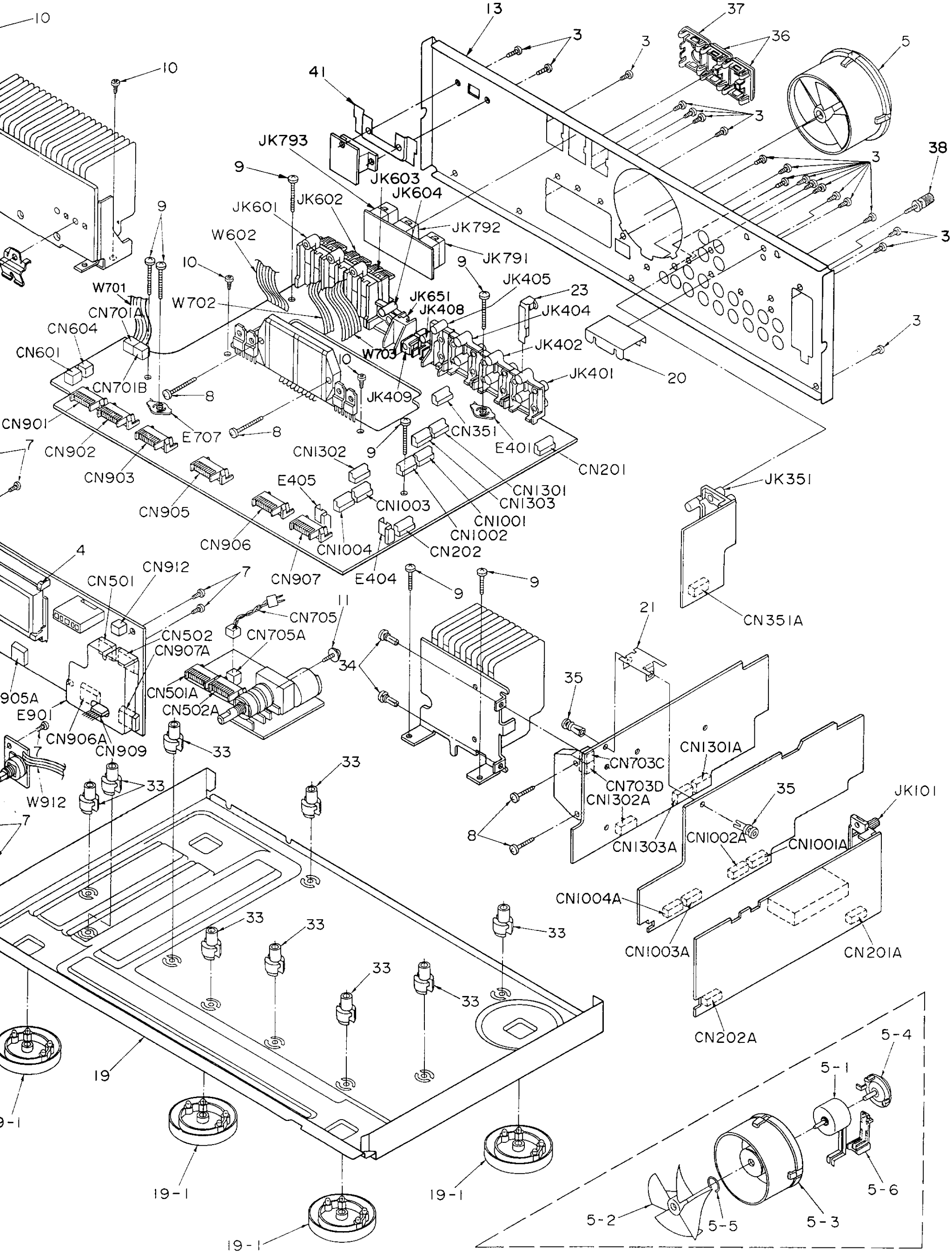

Notes

Ref. No.
1
2
3
4
5
5-1
5-2
5-3
5-4
5-5
5-6
6
7
8
9
10
11
12
13
14
15
16
17
18
19
19-1
20
21
22
23
24
25
26
27
28
29
30
31
32
33
34
35
36
37

Ref. No.	Part No.	Part Name & Description	Remarks
		CABINET AND CHASSIS	
1	RKMD016A-K	CABINET	
2	SNE2129-3	SCREW	
3	XTBS3+8JFZ1	SCREW	
4	RMNO079-1	FL HOLDER	
5	REM0020-1	FAN UNIT	
5-1	MDN-4RB4MRC	MOTOR	
5-2	SHE232-1	FAN	
5-3	RMQ0209-K	FAN CASE	
5-4	RMQ0208-K	FAN CAP	
5-5	SUS271	SPRING	
5-6	RMQ0212-K	FAN TERMINAL CAP	
6	XNS7S	NUT	
7	XTBS26+8J	SCREW	
8	XTB3+16JFZ	SCREW	
9	XTB3+20JFZ	SCREW	
10	XTB3+8JFZ	SCREW	
11	XTWS3+10Q	SCREW	
12	XTWS3+8T	SCREW	
13	RGR0126B-A1	REAR PANEL	
14	RGU0101	SPEAKER SELECTOR BUTTON	
15	RGW0070	VOLUME KNOB	
16	RGW0073	BALANCE KNOB	
17	RGW0083-1	BASS/TREBLE KNOB	
18	RGW0085	TUNING KNOB	
19	RFKJAGX500PP	CHASSIS ASS'Y	
19-1	RKA0009-1	FOOT	
20	RMA0295	PCB HOLD ANGLE A	
21	RMA0310	SUPPORT ANGLE	
22	RMN0139	PCB HOLD ANGLE B	
23	RSC0105	PHONO SHIELD PLATE	
24	RFKGAGX505P	FRONT PANEL ASS'Y	
25	RGL0129	PANEL LIGHT	
26	RGU0453-K	POWER BUTTON	
27	RGU0592	P.EQ BUTTON	
28	RGU0593	PRESET BUTTON	
29	RGU0594C	DOLBY BUTTON	
30	RGU0597	MODE BUTTON	
31	RGU0612A-K	BAND SELECTOR BUTTON	
32	RGU0613A-K	SELECTOR BUTTON	
33	SHE187-3	PCB SUPPORT	
34	SHR411	LATCH	
35	SHR415	LATCH	
36	SJS9233A	AC OUTLET COVER	
37	SJS9234A	AC INLET COVER	
38	SNE2123	GND TERMINAL	
39	SNE4021-1	NUT	
40	SUS894-1	TRANSISTOR ANGLE	
41	RMA0309	SW ANGLE	
		PACKING MATERIAL	
P1	RPG0970	PACKING CASE	(P)
P1	RPG0971	PACKING CASE	(PC)
P2	RPN0324-2	PAD	
P3	XZB60X60A01	PROTECTION BAG(UNIT)	
P4	XZB24X33C04	PROTECTION BAG(F.B.)	(P)
P4	SPB1061	PROTECTION BAG(F.B.)	(PC)
P5	SPSD152	ACCESSORIES BOX	
		ACCESSORIES	
A1	RQT1151-P	INSTRUCTION MANUAL	(P)
A1	RFKSAGX505PC	INST.MANUAL ASS'Y	(PC)
A2	SQX7180	WARRANTY CARD	(P)
A2	SQX7183	WARRANTY CARD	(PC)
A3	SQX9129-1	SERVICENTER LIST	(P)
A3	SQX9131	SERVICENTER LIST	(PC)
A4	RAK-SA501P1	REMOTE CONTROL TRANSMITTER	
A4-1	RKK0020-K	BATTERY COVER	
A5	SJA172-1	AC POWER SUPPLY CORD	(P)⚠
A5	SJA172	AC POWER SUPPLY CORD	(PC)⚠
A6	SPB1163T	AM LOOP ANTENNA	
A6-1	SMA233-1M	AM ANTENNA HOLDER	
A6-2	XTN3+10AFZ	SCREW	
A7	SSA272M	FM INDOOR ANTENNA	

Ref. No.	Part No.	Part Name & Description	Remarks
		INTEGRATED CIRCUIT(S)	
IC101	LM7001	IC, PLL FREQ. SYNTHESIZER	
IC201	AN7273A	IC, FM/AM IF AMP&MIXER	
IC301	SVIUPC1161C3	IC, FM MPX	
IC351	TC4053BP	IC, VIDEO SELECTOR	
IC401	TC9163N	IC, INPUT SELECTOR	
IC451	AN6558F	IC, PHONO EQ. AMP	
IC501	M5238P-1	IC, BUFFER AMP	
IC502	AN6558F	IC, BUFFER AMP	
IC503	M5238P-1	IC, BUFFER AMP	
IC601	SVI3206C	IC, POWER AMP	⚠
IC801	M50946-150FP	IC, MICROCOMPUTER	—
IC802	TC74HC42AP	IC, BCD/DECIMAL DECODER	
IC803	XR-1091DCP	IC, SPECTRUM ANALYZER	
IC851	BA6218	IC, MOTOR DRIVE	
IC901	MN187125STU	IC, MICROCOMPUTER	
IC971	MC14094BCP	IC, LED DRIVE	
IC1001	TC9162N	IC, INPUT SELECTOR	
IC1002	LA2775	IC, NOISE SEQUENCER	
IC1003	LA2770	IC, DOLBY PROLOGIC	
IC1004	M5218AP	IC, BUFFER AMP	
IC1301	SVI3101C	IC. POWER AMP(REAR)	⚠
IC1401	TA7629P	IC, DOLBY B NR	
IC1402	AN6554F	IC, BUFFER AMP	
IC1403	TC9212P	IC, ATTENUATOR	
IC1404	AN6554F	IC, BUFFER AMP	
IC1405	M50198P	IC, DIGITAL DELAY	
IC2001	LV3100M	IC, PARAMETRIC EQUALIZER	
IC2002	TC9214P	IC, ANALOG SWITCH	
IC2003	M5218AP	IC, BUFFER AMP	
		TRANSISTOR(S)	
Q101, 102	2SC2785FE	TRANSISTOR	
Q103, 104	UN4214TA	TRANSISTOR	
Q201, 202	2SC2787L	TRANSISTOR	
Q204-207	2SC1740SQ	TRANSISTOR	
Q208, 209	2SA933SQR	TRANSISTOR	
Q210	2SC1740SQ	TRANSISTOR	
Q301, 302	2SD1450QRSTA	TRANSISTOR	
Q303	2SA933SQR	TRANSISTOR	
Q351, 352	2SC3311A-Q	TRANSISTOR	
Q353, 354	2SA720NC-Q	TRANSISTOR	
Q355	2SC1740SQ	TRANSISTOR	
Q501, 502	2SJ40CDTA	TRANSISTOR	

Ref. No.	Part No.	Part Name & Description	Remarks
Q503, 504	2SC3327-A	TRANSISTOR	
Q505, 506	2SA1309A-R	TRANSISTOR	
Q508	UN4211	TRANSISTOR	
Q509, 510	2SC1740SQ	TRANSISTOR	
Q511, 512	2SC3327-A	TRANSISTOR	
Q513	2SC1740SQ	TRANSISTOR	
Q601	2SA992EFTA	TRANSISTOR	
Q651	2SA1309A-R	TRANSISTOR	
Q652	2SC3311A-Q	TRANSISTOR	
Q701, 702	2SD1761DEF	TRANSISTOR	⚠
Q703	2SC2631QRSTA	TRANSISTOR	⚠
Q704	2SC3311A-Q	TRANSISTOR	
Q705	2SC3940AQSTA	TRANSISTOR	
Q708	2SB1187DEF	TRANSISTOR	⚠
Q709	2SC2631QRSTA	TRANSISTOR	⚠
Q710	2SB1187DEF	TRANSISTOR	⚠
Q713	2SC3311A-Q	TRANSISTOR	⚠
Q751	2SC1740SQ	TRANSISTOR	
Q752	2SC3940AQSTA	TRANSISTOR	
Q801	UN4214TA	TRANSISTOR	
Q802	UN4211	TRANSISTOR	
Q803	UN4111	TRANSISTOR	
Q804-813	UN4115	TRANSISTOR	
Q814, 815	UN4211	TRANSISTOR	
Q891	UN4113TA	TRANSISTOR	
Q892	UN4214TA	TRANSISTOR	
Q894	UN4211	TRANSISTOR	
Q895	2SB1240PRTV6	TRANSISTOR	
Q896	2SC1740SQ	TRANSISTOR	
Q897	2SB1240PRTV6	TRANSISTOR	
Q901	UN4214TA	TRANSISTOR	
Q902	2SA933SQR	TRANSISTOR	
Q903	UN4211	TRANSISTOR	
Q904, 905	2SC1740SQ	TRANSISTOR	
Q906	2SA933SQR	TRANSISTOR	
Q971-973	UN4215	TRANSISTOR	
Q1001-1003	UN4211	TRANSISTOR	
Q1004	2SC1740SQ	TRANSISTOR	
Q1005, 1006	2SC3327-A	TRANSISTOR	
Q1007	2SA1309A-R	TRANSISTOR	
Q1301	2SC3327-A	TRANSISTOR	
Q1302	2SA1309A-R	TRANSISTOR	
Q1303	2SC3327-A	TRANSISTOR	
Q1304	2SA1309A-R	TRANSISTOR	
		DIODE(S)	

Ref. No.	Part No.	Part Name & Description	Remarks
D101	MA165	DIODE	
D204	MA165	DIODE	
D206	MA165	DIODE	
D301	MA165	DIODE	
D351	MA4030MTA	DIODE	
D352, 353	MA165	DIODE	
D501	MA700	DIODE	
D502-507	MA165	DIODE	
D553	LN846RP	L. E. D.	
D602, 603	MA4120	DIODE	
D651	MA165	DIODE	
D652	MA4068M	DIODE	
D701-704	P300DLF	DIODE	⚠
D705	MA4062MTA	DIODE	
D706	MA4068M	DIODE	
D709	MA4330MTA	DIODE	
D710	MA29WA	DIODE	⚠
D711	MA4160-L	DIODE	
D712	MA4082MTA	DIODE	⚠
D751-754	1SR35200TB	DIODE	⚠
D755	MA165	DIODE	
D757	MA4068M	DIODE	
D785	MA165	DIODE	
D801	1SS291TA	DIODE	
D802-804	MA165	DIODE	
D808, 809	MA4062MTA	DIODE	
D814, 815	MA165	DIODE	
D851	1SR35200TB	DIODE	⚠
D891, 892	MA165	DIODE	
D893	LN018304P	L. E. D.	
D894, 895	MA165	DIODE	
D901	1SS291TA	DIODE	
D902	MA165	DIODE	
D903	MA4056MTA	DIODE	
D904, 905	MA165	DIODE	
D908	MA165	DIODE	
D910-917	MA165	DIODE	
D971	MA165	DIODE	
D972-974	LN031527PH	LED BLOCK	
D1001	MA4120	DIODE	
D1002	MA165	DIODE	
D1301-1304	GP15GLF	DIODE	⚠
D1401	MA4120	DIODE	
D1402	MA165	DIODE	
D2002-2005	MA165	DIODE	
		VARIABLE RESISTOR(S)	
VR301	EVNDXAA00B53	V. R, FMI VCO ADJ.	
VR501	EUWMJTF25B15	V. R, MAIN VOLUME	
VR502	EVJ02SF01G15	V. rl BALANCE	
VR801	EVQWQ202224B	V. R, CENTER FREQ/BASS	

Ref. No.	Part No.	Part Name & Description	Remarks
VR802	EVQWQ202224B	V. R, LEVEL/TREBLE	
VR971	EVQWPCF2024B	V. R, ROTARY TUNING	
VR1001	EVJ02SF01G15	V. R, SURROUND BALANCE	
		COMPONENT COMBINATION(S)	
Z201	RLA2Z001-T	COMPONENT COMBINATION	
Z202	SLI7Z101-T	COMPONENT COMBINATION	
Z801, 802	EXFP12331MF	COMPONENT COMBINATION	
Z803	EXBF12E104J	COMPONENT COMBINATION	
Z804, 805	EXBF9E473J	COMPONENT COMBINATION	
Z891	HC-521	REMOTE SENSOR	
Z904	EXBF7E103J	COMPONENT COMBINATION	
Z905	EXBF6E103J	COMPONENT COMBINATION	
Z906	EXBF6E104J	COMPONENT COMBINATION	
Z907	EXFP8331MW	COMPONENT COMBINATION	
Z908	EXBF9E104J	COMPONENT COMBINATION	
		COIL(S)	
L101	RLQZPR47KT-Y	COIL	
L203, 204	ELEPK1R0MA	COIL	
L601, 602	SLQY07G-40	COIL	
L801	RLQZP101KT-Y	COIL	
L802-804	RLQZP4R7KT-Y	COIL	
L851, 852	RLQZP1R0KT-Y	COIL	
L901, 902	ELEPK101KA	COIL	
L903	ELEXT101KA9	COIL	
L1401	ELEPK101KA	COIL	
		TRANSFORMER(S)	
T201	RL14B012-Z	TRANSFORMER	
T202	RL14B013-Z	TRANSFORMER	
T701	RTP1Q5C004-V	POWER TRANSFORMER	⚠
T751	RTP1H5C001-V	TRANSFORMER	⚠
		FUSE(S)	
F1	XBA1F60NU14	FUSE, 125V 6A	⚠
F2, 3	XBA1F25NU14	FUSE, 125V 2.5A	⚠
		FILTER(S) & OSCILLATOR(S)	
CF201, 202	RLFETNGM02LA	RED(10.700MHz)	
CF201, 202	RLFETNGM02LB	BLUE(10.675MHz)	
CF201, 202	RLFETNGM02LC	ORANGE(10.725MHz)	
CF801	EFOGC6004T4	OSCILLATOR(6MHz)	
CF901	EFOGC4194T4	OSCILLATOR(4.19MHz)	
		OSCILLATOR(S)	

Ref. No.	Part No.	Part Name & Description	Remarks
X101	SVQ49U722-S	OSCILLATOR(7.2MHz)	
X1401	EF0GC3004T4	OSCILLATOR(3MHz)	
		DISPLAY TUBE	
FL901	RSL0101-F	DISPLAY TUBE	
		SWITCH(ES)	
S601	RSP2008-J	SW, SPEAKERS	
S702	RSS3B004S	SW, SPEAKER IMPEDANCE	⚠
S801	EVQ21405R	SW, DISPLAY MODE	
S802	EVQ21405R	SW, EQ1	
S803	EVQ21405R	SW, EQ2	
S804	EVQ21405R	SW, EQ3	
S805	EVQ21405R	SW, EQ4	
S806	EVQ21405R	SW, P. EQ SYS ON/OFF	
S807	EVQ21405R	SW, FINE	
S808	EVQ21405R	SW, SLOPE(Q)	
S809	EVQ21405R	SW, P. EQ/TONE	
S810	EVQ21405R	SW, MEMORY	
S811	EVQ21405R	SW, FIXED PRESET	
S812	EVQ21405R	SW, MANUAL PRESET 1	
S813	EVQ21405R	SW, MANUAL PRESET 2	
S814	EVQ21405R	SW, MANUAL PRESET 3	
S901	EVQ21405R	SW, PRESET TUNING 1	
S902	EVQ21405R	SW, PRESET TUNING 2	
S903	EVQ21405R	SW, PRESET TUNING 3	
S904	EVQ21405R	SW, PRESET TUNING 4	
S905	EVQ21405R	SW, PRESET TUNING 5	
S906	EVQ21405R	SW, PRESET TUNING 6	
S907	EVQ21405R	SW, PRESET TUNING 7	
S908	EVQ21405R	SW, PRESET TUNING 8	
S909	EVQ21405R	SW, PRESET TUNING 9	
S910	EVQ21405R	SW, PRESET TUNING 0	
S911	EVQ21405R	SW, SURROUND	
S912	EVQ21405R	SW, CENTER LEVEL(DOWN)	
S913	EVQ21405R	SW, CENTER LEVEL(UP)	
S914	EVQ21405R	SW, REAR LEVEL(DOWN)	
S915	EVQ21405R	SW, REAR LEVEL(UP)	
S916	EVQ21405R	SW, INPUT SELECTOR(PHONO)	
S917	EVQ21405R	SW, INPUT SELECTOR(TUNER)	
S918	EVQ21405R	SW, TAPE/DAT MONITOR	
S919	EVQ21405R	SW, TEST	
S920	EVQ21405R	SW, CENTER MODE	
S921	EVQ21405R	SW, INPUT SELECTOR(VCR2)	
S922	EVQ21405R	SW, INPUT SELECTOR(VCR1)	
S923	EVQ21405R	SW, INPUT SELECTOR(CD)	
S924	EVQ21405R	SW, 3 STEREO	
S925	EVQ21405R	SW, LOUDNESS	
S926	EVQ21405R	SW, TUNING MODE	
S927	EVQ21405R	SW, BAND SELECTOR(FM)	

Ref. No.	Part No.	Part Name & Description	Remarks
S928	EVQ21405R	SW, BAND SELECTOR(AM)	
S929	EVQ21405R	SW, FM MODE	
S930	EVQ21405R	SW, MEMORY SCAN	
S931	EVQ21405R	SW, MEMORY	
S932	EVQ21405R	SW, POWER	
		CONNECTOR(S)&SOCKET(S)	
CN201	RJT057W007-1	CONNECTOR(7P)	
CN201A	RJU057W007	SOCKET(7P)	
CN202	RJT057W007-1	CONNECTOR(7P)	
CN202A	RJU057W007	SOCKET(7P)	
CN351	RJT057W007-1	CONNECTOR(7P)	
CN351A	RJU057W007	SOCKET(7P)	
CN501	RJT003K006M1	CONNECTOR(6P)	
CN502	RJT003K008M1	CONNECTOR(8P)	
CN601	RJS1A1704	SOCKET(4P)	
CN604	RJS1A1703	CONNECTOR (3P)	
CN705	REE0023	CONNECTOR ASS'Y(2P)	
CN901A	RJT003K008M1	CONNECTOR(8P)	
CN901	RJU003K008M1	SOCKET(8P)	
CN902A	RJT003K008M1	CONNECTOR(8P)	
CN902	RJU003K008M1	SOCKET(8P)	
CN903A	RJT003K008M1	CONNECTOR(8P)	
CN903	RJU003K008M1	SOCKET(8P)	
CN905A	RJT003K006M1	CONNECTOR(6P)	
CN905	RJU003K006M1	SOCKET(6P)	
CN906A	RJT003K008M1	CONNECTOR(8P)	
CN906	RJU003K008M1	SOCKET(8P)	
CN907A	RJT003K008M1	CONNECTOR(8P)	
CN907	RJU003K008M1	SOCKET(8P)	
CN908, 909	SJT30648BB1	CONNECTOR(6P)	
CN910	SJT30548BB1	CONNECTOR(5P)	
CN911	SJT30549BB1	CONNECTOR(5P)	
CN912	RJS1A1703	CONNECTOR(3P)	
CN1001	RJT057W007-1	CONNECTOR(7P)	
CN1001A	RJU057W007	SOCKET(7P)	
CN1002	RJT057W007-1	CONNECTOR(7P)	
CN1002A	RJU057W007	SOCKET(7P)	
CN1003	RJT057W007-1	CONNECTOR(7P)	
CN1003A	RJU057W007	SOCKET(7P)	
CN1004	RJT057W007-1	CONNECTOR(7P)	
CN1004A	RJU057W007	SOCKET(7P)	
CN1301	RJT057W007-1	CONNECTOR(7P)	
CN1301A	RJU057W007	SOCKET(7P)	
CN1302	RJT057W007-1	CONNECTOR(7P)	
CN1302A	RJU057W007	SOCKET(7P)	
CN1303	RJT057W007-1	CONNECTOR(7P)	
CN1303A	RJU057W007	SOCKET(7P)	
CN501A	RJU003K006M1	SOCKET(6P)	
CN502A	RJU003K008M1	SOCKET(8P)	
CN602A	RJS1A1704	SOCKET(4P)	

Ref. No.	Part No.	Part Name & Description	Remarks
CN701A	RJS1A1704	SOCKET (4P)	
CN705A	SJT3213	CONNECTOR (2P)	
CN908A	SJS50681BB	SOCKET (6P)	
CN909A	SJS50681BB	SOCKET (6P)	
CN910A	SJS50581BB	SOCKET (5P)	
CN911A	SJS50581BB	SOCKET (5P)	
CN602B	RJS1A1704	SOCKET (4P)	
CN701B	RJS1A1704	SOCKET (4P)	
CN703C	RJS1A1704	SOCKET (4P)	
CN703D	RJS1A1703	CONNECTOR (3P)	
		SHIELD PART (S)	
E401	SNE1004-1	GND PLATE	
E404, 405	SME103-6	P. C. B. HOLDER	
E701-706	RJR0011	FUSE HOLDER	
E707	SNE1004-1	GND PLATE	
E801	RSC0218	SHIELD PLATE	
E901	RSC0219	SHIELD PLATE	
		JACK (S)	
JK101	RJH4405	ANTENNA TERMINAL	
JK351	SJF3069-3N	VCR1/VCR2/VIDEO OUT	
JK401	SJF3069N	TERMINAL, PHONO/CD	
JK402	SJF3069N	TERMINAL, TAPE/DAT	
JK404	SJF3069N	TERMINAL, VCR 1/VCR2	
JK405	SJF3068N	TERMINAL, VCR 1	
JK408	SJFD7	CENTER OUT	
JK409	RJJ33TR01	REMOTE CONTROL OUT	

Ref. No.	Part No.	Part Name & Description	Remarks
JK601	RJR0054	FRONT SPEAKERS A	
JK602	RJR0054	FRONT SPEAKERS B	
JK603	RJR0054	REAR SPEAKERS	
JK604	SJF5201-1	CENTER SPEAKER	
JK651	RJS1A7402-1	MOTOR JACK	
JK791	SJS9233B	AC OUTLET	⚠
JK792	SJS9233B	AC OUTLET	⚠
JK793	SJS9234B	AC INLET	⚠
HP601	RJJ63TS01	HEADPHONES JACK	
		RELAY (S)	
RL601	SSY134	RELAY	
RL751	RSY0005-1C	RELAY	⚠
		FRONT END PACK ASS'Y	
TN101	RAL0006	FM FRONT END	
		FLAT CABLE (S)	
W601	RWJ1804120QK	FLAT CABLE (4P)	
W602	RWJ1808320QK	FLAT CABLE (8P)	
W604	RWJ1803120QK	FLAT CABLE (3P)	
W701	RWJ1808240QK	FLAT CABLE (8P)	
W702	RWJ1803220KK	FLAT CABLE (3P)	
W703	RWJ1807430QK	FLAT CABLE (7P)	
W704	RWJ1807160KK	FLAT CABLE (7P)	
W912	RWJ1803110QK	FLAT CABLE (3P)	

PACKING

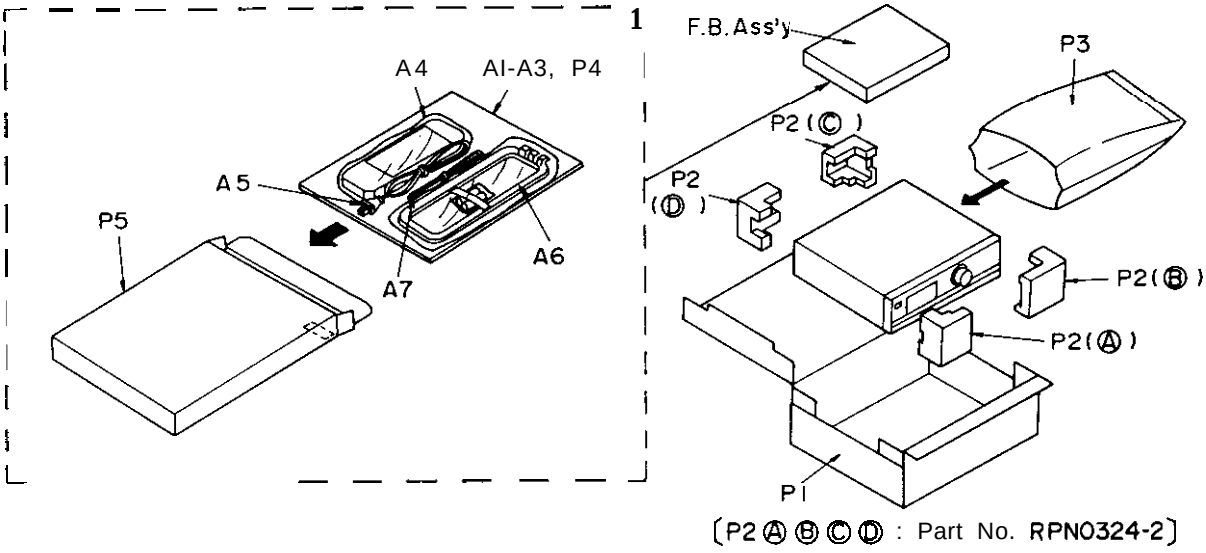

〔P2 Ⓐ Ⓑ Ⓒ Ⓓ : Part No. RPN0324-2〕

■ RESISTORS & CAPACITORS

Notes : • Capacity **valuse** are in **microfarads (uF)** unless specified **otherwise, P=Pico-farads (pF) F=Farads (F)**
• Resistance values are in ohms. unless specified otherwise, **1K=1,000 (OHM), 1M=1,000k (OHM)**

Ref. No.	Part No.	Values & Remarks
		RESISTORS
R101, 102	ERDS2TJ103	1/4W 10K
R104	ERDS2TJ102	1/4W 1K
R105	ERDS2TJ561	1/4W 560
R106	ERDS2TJ562	1/4W 5.6K
R107	ERDS2TJ103	1/4W 10K
R108	ERDS2TJ151	1/4W 150
R109-111	ERDS2TJ104	1/4W 100K
R201	ERDS2TJ152	1/4W 1.5K
R202	ERDS2TJ824	1/4W 820K
R203	ERDS2TJ122	1/4W 1.2K
R204	ERDS2TJ474	1/4W 470K
R205	ERDS2TJ391	1/4W 390
R206	ERDS2TJ561	1/4W 560
R207	ERDS2TJ822	1/4W 8.2K
R208	ERDS2TJ102	1/4W 1K
R209	ERDS2TJ471	1/4W 470
R210	ERDS2TJ332	1/4W 3.3K
R211	ERDS2TJ222	1/4W 2.2K
R212	ERDS2TJ153	1/4W
R213	ERDS2TJ104	1/4W 100K
R214	ERDS2TJ824	1/4W 820K
R215	ERDS2TJ153	1/4W 15K
R216	ERDS2TJ563	1/4W 56K
R217	ERDS2TJ223	1/4W 22K
R218	ERDS2TJ563	1/4W 56K
R219	ERDS2TJ223	1/4W 22K
R220	ERDS2TJ103	1/4W 10K
R221	ERDS2TJ104	1/4W 100K
R222	ERDS2TJ473	1/4W 47K
R223	ERDS2TJ154	1/4W 150K
R226	ERDS2TJ103	1/4W 10K
R228	ERDS2TJ123	1/4W 12K
R229	ERDS2TJ102	1/4W 1K
R230	ERDS2TJ104	1/4W 100K
R231	ERDS2TJ471	1/4W 470
R232	ERDS2TJ122	1/4W 1.2K
R233	ERDS2TJ684	1/4W 680K
R234	ERDS2TJ103	1/4W 10K
R235	ERDS2TJ471	1/4W 470
R237	ERDS2TJ221	1/4W 220
R238	ERDS2TJ471	1/4W 470
R247	ERDS2TJ103	1/4W 10K
R301	ERDS2TJ393	1/4W 39K
R302	ERDS2TJ151	1/4W 150
R303, 304	ERDS2TJ223	1/4W 22K
R305, 306	ERDS2TJ272T	1/4W 2.7K
R307, 308	ERDS2TJ104	1/4W 100K
R309	ERDS2TJ334	1/4W 330K
R311	ERDS2TJ102	1/4W 1K
R312	ERDS2TJ153	1/4W 15K
R313, 314	ERDS2TJ473	1/4W 47K
R315	ERDS2TJ103	1/4W 10K
R316	ERDS2TJ222	1/4W 2.2K
R317	ERDS2TJ473	1/4W 47K
R347	ERDS2TJ272T	1/4W 2.7K
R348	ERDS2TJ221	1/4W 220
R351, 352	ERDS2EJ820	1/4W 82
R353, 354	ERDS2TJ104	1/4W 100K
R355-357	ERDS2TJ680T	1/4W 68
R358	ERDS2TJ272T	1/4W 2.7K
R359	ERDS2TJ330	1/4W 33
R360	ERDS2TJ560T	1/4W 56
R361-363	ERDS2TJ680T	1/4W 68
R364	ERDS2TJ330	1/4W 33
R365	ERDS2TJ560T	1/4W 56
R366	ERDS2TJ473	1/4W 47K
R367.368	ERDS2TJ272T	1/4W 2.7K
R369	ERDS2TJ103	1/4W 10K
R370. 371	ERDS2TJ473	1/4W 47K
R372	ERDS2TJ102	1/4W 1K
R373	ERDS2TJ103	1/4W 10K
R401, 402	ERDS2TJ332	1/4W 3.3K
R403, 404	ERDS2TJ822	1/4W 8.2K
R405, 406	ERDS2TJ470	1/4W 47
R411-420	ERDS2TJ102	1/4W 1K
R421, 422	ERDS2TJ222	1/4W 2.2K
R429-431	ERDS2TJ103	1/4W 10K
R451, 452	ERDS2TJ821	1/4W 820
R453, 454	ERDS2TJ224T	1/4W 220K
R455, 456	ERDS2TJ563	1/4W 56K
R457, 458	ERDS2TJ271	1/4W 270
R459, 460	ERDS2TJ680T	1/4W 68
R461, 462	ERDS2TJ184T	1/4W 180K
R463, 464	ERDS2TJ123	1/4W 12K
R465, 466	ERDS2TJ563	1/4W 56K
R467, 468	ERDS2TJ102	1/4W 1K
R501, 502	ERDS2TJ222	1/4W 2.2K
R503, 504	ERDS2TJ102	1/4W 1K
R505, 506	ERDS2TJ473	1/4W 47K
R507, 508	ERDS2TJ104	1/4W 100K
R509-512	ERDS2TJ103	1/4W 10K
R513	ERDS2TJ153	1/4W 15K
R514	ERDS2TJ394	1/4W 390K
R515, 516	ERDS2TJ104	1/4W 100K
R517, 518	ERDS2TJ563	1/4W 56K
R519, 520	ERDS2TJ472	1/4W 4.7K
R521, 522	ERDS2TJ393	1/4W 39K
R523, 524	ERDS2TJ222	1/4W 2.2K
R525, 526	ERDS2TJ221	1/4W 220
R527-530	ERDS2TJ102	1/4W 1K
R531	ERDS2TJ394	1/4W 390K
R532	ERDS2TJ103	1/4W 10K
R533	ERDS2TJ104	1/4W 100K
R534	ERDS2TJ103	1/4W 10K
R535	ERDS2TJ104	1/4W 100K
R538	ERDS2TJ684	1/4W 680K
R539	ERDS2TJ153	1/4W 15K
R540	ERDS2TJ223	1/4W 22K
R542	ERDS2TJ222	1/4W 2.2K
R543	ERDS2TJ824	1/4W 820K
R544	ERDS2TJ272T	1/4W 2.7K
R545	ERDS2TJ104	1/4W 100K
R546	ERDS2TJ103	1/4W 10K
R547	ERDS2TJ183T	1/4W 18K
R550	ERDS2TJ103	1/4W 10K
R551	ERDS2TJ104	1/4W 100K
R552	ERDS2TJ392T	1/4W 3.9K
R553	ERDS2TJ103	1/4W 10K
R554	ERDS2TJ223	1/4W 22K
R555	ERDS2TJ472	1/4W 4.7K
R556	ERDS2TJ104	1/4W 100K
R557	ERDS2TJ471	1/4W 470
R558	ERDS2TJ103	1/4W 10K
R559-561	ERDS2TJ104	1/4W 100K
R601. 602	ERDS2TJ102	1/4W 1K
R603, 604	ERDS2TJ563	1/4W 56K
R605, 606	ERDS2TJ182	1/4W 1.8K
R607, 608	ERDS2TJ563	1/4W 56K
R609. 610	ERDS2TJ470	1/4W 47
R611, 612	ERDS1FVJ100T	1/2W 10 ⚠
R613	ERDS2TJ223	1/4W 22K
R614	ERD25FJ470	1/4W 47 ⚠
R615	ERDS2TJ473	1/4W 47K ⚠
R616-618	ERDS1FVJ221T	1/2W 220 ⚠
R619. 620	ERG2ANJP331S	2W 330
R621, 622	ERDS2TJ222	1/4W 2.2K
R623	ERDS2TJ684	1/4W 680K
R624	ERDS2TJ103	1/4W 10K ⚠
R627	ERDS2TJ154	1/4W 150K
R628	ERDS2TJ684	1/4W 680K
R629, 630	ERDS1FVJ181T	1/2W 180 ⚠
R631	ERDS2TJ103	1/4W 10K
R632	ERD25FJ101	1/4W 100 ⚠
R651-654	ERDS2TJ223	1/4W 22K

Ref. No.	Part No.	Values & Remarks
R655	ERDS2TJ392T	1/4W 3.9K
R656, 657	ERDS2TJ103	1/4W 10K
R658	ERDS2TJ223	1/4W 22K
R659-661	ERDS1FVJ220T	1/2W 22 ⚠
R662	ERDS2TJ104	1/4W 100K
R701	ERDS1FVJ332T	1/2W 3.3K ⚠
R702	ERDS2TJ122	1/4W 1.2K
R703	ERDS2TJ272T	1/4W 2.7K
R704	ERDS2TJ222	1/4W 2.2K
R705	ERDS2TJ272T	1/4W 2.7K ⚠
R706, 707	ERDS2TJ1R2	1/4W 1.2 ⚠
R708, 709	ERDS1FVJ180T	1/2W 18 ⚠
R710	ERDS2TJ272T	1/4W 2.7K
R711	ERDS1FVJ2R2T	1/2W 2.2 ⚠
R713	ERDS2TJ183T	1/4W 18K ⚠
R714	ERDS2TJ102	1/4W 1K ⚠
R715	ERDS2TJ101	1/4W 100 ⚠
R716	ERDS2TJ222	1/4W 2.2K ⚠
R717	ERD25FVJ150T	1/4W 15 ⚠
R718, 719	ERDS2TJ1R5T	1/4W 1.5 ⚠
R753, 754	ERDS2TJ472	1/4W 4.7K
R755	ERDS2TJ102	1/4W 1K
R771, 772	ERDS1FVJ2R2T	1/2W 2.2 ⚠
R773, 774	ERDS1FVJ6R8T	1/2W 6.8 ⚠
R777, 778	ERDS1FJ270	1/2W 27 ⚠
R780	ERDS1FVJ4R7T	1/2W 4.7 ⚠
R791	ERC12ZGK335	1/2W 3.3M ⚠
R801	ERDS2TJ681	1/4W 680
R802	ERDS2TJ102	1/4W 1K
R803	ERDS2TJ105T	1/4W 1M
R804	ERDS2TJ104	1/4W 100K
R805	ERDS2TJ223	1/4W 22K
R806	ERDS2TJ471	1/4W 470
R807	ERDS2TJ822	1/4W 8.2K
R808	ERDS2TJ563	1/4W 56K
R809-812	ERDS2TJ102	1/4W 1K
R813, 814	ERDS2TJ122	1/4W 1.2K
R815, 816	ERDS2TJ152	1/4W 1.5K
R817, 818	ERDS2TJ182	1/4W 1.8K
R819	ERDS2TJ222	1/4W 2.2K
R821	ERDS2TJ332	1/4W 3.3K
R823	ERDS2TJ472	1/4W 4.7K
R825	ERDS2TJ682T	1/4W 6.8K
R827	ERDS2TJ103	1/4W 10K
R828, 829	ERDS1FVJ331T	1/2W 330 ⚠
R830	ERDS2TJ104	1/4W 100K
R831	ERDS2TJ152	1/4W 1.5K
R832	ERDS2TJ332	1/4W 3.3K
R835, 836	ERDS2TJ824	1/4W 820K
R837, 838	ERDS2TJ154	1/4W 150K
R839, 840	ERDS2TJ153	1/4W 15K
R841, 842	ERDS2TJ222	1/4W 2.2K

Ref. No.	Part No.	Values & Remarks
R843, 844	ERDS2TJ182	1/4W 1.8K
R845-849	ERDS2TJ473	1/4W 47K
R851	ERDS1FVJ2R2T	1/2W 2.2 ⚠
R853	ERDS2TJ473	1/4W 47K
R891	ERDS2TJ102	1/4W 1K
R893	ERDS2TJ333	1/4W 33K
R894	ERDS2TJ102	1/4W 1K
R895	ERDS2TJ103	1/4W 10K
R896	ERDS2TJ222	1/4W 2.2K
R897	ERDS2TJ221	1/4W 220
R898	ERDS2TJ223	1/4W 22K
R899	ERDS2TJ473	1/4W 47K
R901	ERDS2TJ102	1/4W 1K
R902	ERDS2TJ681	1/4W 680
R903, 904	ERDS2TJ103	1/4W 10K
R905, 906	ERDS2TJ102	1/4W 1K
R907, 908	ERDS2TJ182	1/4W 1.8K
R909, 910	ERDS2TJ222	1/4W 2.2K
R911, 912	ERDS2TJ392T	1/4W 3.9K
R913, 914	ERDS2TJ562	1/4W 5.6K
R915, 916	ERDS2TJ123	1/4W 12K
R917, 918	ERDS2TJ273	1/4W 27K
R919	ERDS2TJ224T	1/4W 220K
R920	ERDS2TJ222	1/4W 2.2K
R921	ERDS2TJ103	1/4W 10K
R922, 923	ERDS2TJ472	1/4W 4.7K
R925, 926	ERDS2TJ102	1/4W 1K
R927	ERDS2TJ331	1/4W 330
R928, 929	ERDS2TJ103	1/4W 10K
R930, 931	ERD25FJ101	1/4W 100 ⚠
R932	ERDS2TJ102	1/4W 1K
R933, 934	ERDS2TJ473	1/4W 47K
R935, 936	ERDS2TJ474	1/4W 470K
R937	ERDS2TJ103	1/4W 10K
R938	ERDS2TJ102	1/4W 1K
R939	ERDS2TJ103	1/4W 10K
R971, 972	ERDS2TJ221	1/4W 220
R973	ERDS2TJ391	1/4W 390
R1001	ERDS2TJ102	1/4W 1K
R1002, 1003	ERDS2TJ470	1/4W 47
R1004-1006	ERDS2TJ223	1/4W 22K
R1007	ERDS2TJ824	1/4W 820K
R1008	ERDS2TJ102	1/4W 1K
R1009	ERDS1FVJ680T	1/2W 68 ⚠
R1010, 1011	ERDS2TJ473	1/4W 47K
R1012, 1013	ERDS2TJ153	1/4W 15K
R1014, 1015	ERDS2TJ752T	1/4W 7.5K
R1017	ERDS2TJ474	1/4W 470K
R1018-1021	ERDS2TJ473	1/4W 47K
R1022	ERDS2TJ103	1/4W 10K
R1023, 1024	ERDS2TJ224T	1/4W 220K
R1025	ERDS2TJ102	1/4W 1K

Ref. No.	Part No.	Values & Remarks
R1026, 1027	ERDS2TJ103	1/4W 10K
R1028	ERDS2TJ473	1/4W 47K
R1301, 1302	ERDS2TJ222	1/4W 2.2K
R1303, 1304	ERDS2TJ563	1/4W 56K
R1307, 1308	ERDS2TJ563	1/4W 56K
R1309, 1310	ERDS2TJ332	1/4W 3.3K
R1311	ERDS2TJ684	1/4W 680K
R1313	ERDS2TJ564	1/4W 560K ⚠
R1314	ERDS2TJ154	1/4W 150K
R1315, 1316	ERD25FVJ4R7T	1/4W 4.7 ⚠
R1317, 1318	ERDS2TJ104	1/4W 100K
R1319, 1320	ERDS2TJ222	1/4W 2.2K
R1321, 1322	ERDS2TJ104	1/4W 100K
R1323	ERDS2TJ102	1/4W 1K
R1324	ERDS2TJ824	1/4W 820K
R1325	ERDS2TJ102	1/4W 1K
R1326, 1327	ERDS2TJ103	1/4W 10K
R1328	ERD25FJ470	1/4W 47 ⚠
R1329	ERDS2TJ824	1/4W 820K
R1405-1410	ERDS2TJ153	1/4W 15K
R1411	ERDS2TJ272T	1/4W 2.7K
R1424	ERD25FJ470	1/4W 47 ⚠
R1431	ERDS2TJ105T	1/4W 1M
R1434	ERDS2TJ822	1/4W 8.2K
R1435	ERDS2TJ103	1/4W 10K
R1443	ERDS2EJ820	1/4W 82
R1449	ERDS2TJ102	1/4W 1K
R1452	ERDS2TJ471	1/4W 470
R1453	ERDS2TJ101	1/4W 100
R1454	ERDS2TJ272T	1/4W 2.7K
R1455, 1456	ERDS2TJ473	1/4W 47K
R1457	ERDS2TJ274	1/4W 270K
R1458	ERDS2TJ154	1/4W 150K
R1459	ERDS2TJ332	1/4W 3.3K
R1460	ERDS2TJ181T	1/4W 180
R1461, 1462	ERDS2TJ223	1/4W 22K
R1463	ERDS2TJ103	1/4W 10K
R1464-1466	ERDS2TJ474	1/4W 470K
R1467-1469	ERDS2TJ332	1/4W 3.3K
R1470	ERDS2TJ333	1/4W 33K
R1472	ERDS2TJ682T	1/4W 6.8K
R1473	ERDS2TJ222	1/4W 2.2K
R1474-1476	ERDS2TJ474	1/4W 470K
R1477	ERDS2TJ222	1/4W 2.2K
R1478	ERDS2TJ332	1/4W 3.3K
R1479	ERDS2TJ104	1/4W 100K
R1480	ERDS2TJ102	1/4W 1K
R1481	ERDS2TJ104	1/4W 100K
R1482	ERDS2TJ102	1/4W 1K
R1483	ERDS2TJ562	1/4W 5.6K
R1484	ERDS2TJ222	1/4W 2.2K
R1485	ERDS2TJ102	1/4W 1K

Ref. No.	Part No.	Values & Remarks
R1486	ERDS2TJ332	1/4W 3.3K
R1487	ERDS2TJ104	1/4W 100K
R2001	ERDS2TJ473	1/4W 47K
R2005-2008	ERDS2TJ104	1/4W 100K
R2009, 2010	ERDS2TJ473	1/4W 47K
R2011, 2012	ERDS2TJ104	1/4W 100K
R2031, 2032	ERDS2TJ473	1/4W 47K
R2033, 2034	ERDS2TJ562	1/4W 5.6K
R2035-2038	ERDS2TJ222	1/4W 2.2K
R2039, 2040	ERDS2TJ562	1/4W 5.6K
		CAPACITORS
C101, 102	ECBT1H150JC5	50V 15P
C103	ECBT1H102KB5	50V 1000P
C105	ECEA0JU221	6.3V 220U
C106	ECKR1H103ZF5	50V 0.01U
C107	ECKT1H223ZF	50V 0.022U
C108	ECEA1EK4R7	25V 4.7U
C109	ECEA1CU330	16V 33U
C110, 111	ECBT1H102KB5	50V 1000P
C201, 202	ECKR1H103ZF5	50V 0.01U
C204	ECBT1C103MS5	16V 0.01U
C205	ECKT1H223ZF	50V 0.022U
C206	ECBT1H150JC5	50V 15P
C207	ECBT1C103MS5	16V 0.01U
C208	ECEA0JU101B	6.3V 100U
C209	ECEA1HK100	50V 10U
C210-212	ECKT1H223ZF	50V 0.022U
C213	ECBT1H101KB5	50V 100P
C214	ECEA1CK100B	16V 10U
C215	ECKR1H103ZF5	50V 0.01U
C216	ECEA1CK100B	16V 10U
C217	ECEA1HK2R2B	50V 2.2U
C220	ECEA1CK100B	16V 10U
C221	ECFR1E183KR	25V 0.018U
C222	ECQM1H473JZ	50V 0.047U
C225	ECBT1H180JC5	50V 18P
C226	ECKR1H103ZF5	50V 0.01U
C227	ECEA1CK100B	16V 10U
C228	ECBT1H100JC5	50V 10P
C229	ECBT1H102KB5	50V 1000P
C230	ECCR1H680JS5	50V 68P
C231	ECCR1H820JS5	50V 82P
C301	ECEA1CU101	16V 100U
C302	ECEA1HKR47	50V 0.47U
C303	ECEA1HK010B	50V 1U
C304-306	ECEA1HK3R3	50V 3.3U
C307, 308	ECFR1E273KR	25V 0.027U
C309	ECKT1H223ZF	50V 0.022U
C310	ECFR1E473KR	25V 0.047U
C311	ECQP1471JZ	50V 470P

Ref. No.	Part No.	Values & Remarks
C312	ECEA1VK4R7	35V 4.7U
C313, 314	ECBT1H181KB5	50V 180P
C351	ECEA0JU101B	6.3V 100U
C352	ECEA0JK101	6.3V 100U
C353	ECBT1H120J5	50V 12P
C354	ECEA0JU102	6.3V 1000U
C355	ECBT1H120J5	50V 12P
C356	ECEA0JU102	6.3V 1000U
C357	ECEA1CU470	16V 47U
C358	ECEA1CK100B	16V 10U
C359	ECEA1CU470	16V 47U
C401, 402	ECBT1E103ZF	25V 0.01U
C405, 406	ECBT1H101KB5	50V 100P
C407	ECEA0JPS101B	6.3V 100U
C408, 409	ECBT1E103ZF	25V 0.01U
C410	ECEA1CU220	16V 22U
C421	ECEA1CU220	16V 22U
C451, 452	ECEA1VPS4R7	35V 4.7U
C453, 454	ECBT1H101KB5	50V 100P
C455, 456	ECBT1H102KB5	50V 1000P
C457, 458	ECFR1E223KR	25V 0.022U
C459, 460	ECFR1E682KR	25V 6800P
C461, 462	ECEA1VPS4R7	35V 4.7U
C463, 464	ECEA0JPS330	6.3V 33U
C501, 502	ECFR1E333KR	25V 0.033U
C503, 504	ECBT1H101KB5	50V 100P
C505, 506	ECEA1CU470	16V 47U
C507-510	ECBT1E103ZF	25V 0.01U
C511, 512	ECEA1HK3R3	50V 3.3U
C513, 514	ECBT1H150J5	50V 15P
C515, 516	ECBT1H101KB5	50V 100P
C517, 518	ECBT1H330J5	50V 33P
C519, 520	ECEA1HK3R3	50V 3.3U
C521, 522	ECKR1H103ZF5	50V 0.01U
C523	ECBT1H330J5	50V 33P
C524	ECEA1HK010B	50V 1U
C525	ECEA1HK2R2B	50V 2.2U
C526, 527	ECBT1E103ZF	25V 0.01U
C529, 530	ECEA1CU220	16V 22U
C531	ECBT1H330J5	50V 33P
C532	ECBT1E103ZF	25V 0.01U
C533, 534	ECEA1VPS4R7	35V 4.7U
C601, 602	ECEA1VPS4R7	35V 4.7U
C603, 604	ECQP1271JZ	50V 270P
C605, 606	ECEA1CPS220	16V 22U
C607, 608	ECCR1H100K5	50V 10P
C609, 610	ECCD1H151K	50V 150P
C611, 612	ECKT1H223ZF	50V 0.022U
C613	ECEA1VU470	35V 47U
C614	ECEA1HU330	50V 33U
C615	ECEA2AU100	100V 10U
C616	ECEA2AN2R2SB	100V 2.2U ⚠

Ref. No.	Part No.	Values & Remarks
C617, 618	ECQB1H681KF3	50V 680P
C651	ECEA1HK2R2B	50V 2.2U
C652	ECKR1H103ZF5	50V 0.01U
C701, 702	ECES71V103VN	71V 10000U ⚠
C703	ECKR1H103ZF5	50V 0.01U ⚠
C704	ECEA1VU101B	35V 100U
C705	ECEA1CU101	16V 100U
C706	ECKR1H103ZF5	50V 0.01U
C709, 710	ECKR1H103ZF5	50V 0.01U ⚠
C711	ECEA1CU101	16V 100U
C712	ECEA1VU470	35V 47U ⚠
C713	ECEA0JU101B	6.3V 100U
C751	ECEA1CU102	16V 1000U
C752	ECEA1CU470	16V 47U
C753, 754	ECKR1H103ZF5	50V 0.01U
C755	ECBT1E103ZF	25V 0.01U
C756	ECEA1CU220	16V 22U
C771	ECQE2104KF3	250V 0.1U ⚠
C791	ECKWNS103ZV	500V 0.01U ⚠
C801	ECEA0JU102	6.3V 1000U
C802	ECBT1E103ZF	25V 0.01U
C803, 804	ECEA0JU102	6.3V 1000U
C805	ECEA0JK221B	6.3V 220U
C806	ECBT1E103ZF	25V 0.01U
C807, 808	ECEA1HKR47	50V 0.47U
C809	ECEA0JK470	6.3V 47U
C810	ECKR1H103ZF5	50V 0.01U
C811-814	ECBT1E103ZF	25V 0.01U
C815	ECEA1CK470	16V 47U
C816	ECEA1CK100B	16V 10U
C817, 818	ECBT1H102KB5	50V 1000P
C819	ECQP1102JZ3	100V 1000P
C820	ECEA1CK470	16V 47U
C821, 822	ECEA1HK3R3	50V 3.3U
C851, 852	ECEA0JU101B	6.3V 100U
C853, 854	ECFR1E104KR	25V 0.1U
C891	ECFR1E392KR	25V 3900P
C892	ECEA0JU470B	6.3V 47U
C901	ECEA0JU102	6.3V 1000U
C902	ECBT1E103ZF	25V 0.01U
C904, 905	ECEA0JU102	6.3V 1000U
C906	ECBT1E103ZF	25V 0.01U
C909, 910	ECBT1H101KB5	50V 100P
C911, 912	ECEA2AU100	100V 10U
C913	ECEA1VK100B	35V 10U
C914	ECEA1HK100	50V 10U
C916	ECEA1HK010B	50V 1U
C917	ECEA1CK100B	16V 10U
C971	ECKR1H103ZF5	50V 0.01U
C1001	ECKR1H103ZF5	50V 0.01U
C1002	ECBT1E103ZF	25V 0.01U
C1003, 1004	ECEA1HK4R7	50V 4.7U

Ref. No.	Part No.	Values & Remarks
C1005-1008	ECQV1H104JZ3	50V 0.1U
C1009, 1010	ECBA1H681KB5	50V 680P
C1011	ECQV1H334JZ3	50V 0.33U
C1012	ECKR1H103ZF5	50V 0.01U
C1013	ECQV1H334JZ3	50V 0.33U
C1014-1017	ECEA1HK4R7	50V 4.7U
C1018, 1019	ECQM1H682JZ	50V 6800P
C1020	ECEA1CK470	16V 47U
C1021	ECEA1CK101	16V 100U
C1022, 1023	ECEA1HKR22B	50V 0.22U
C1024, 1025	ECEA1HK4R7	50V 4.7U
C1026, 1027	ECQM1H224JZ	50V 0.22U
C1028, 1029	ECEA1CK100B	16V 10U
C1030	ECQV1H154JZ3	50V 0.15U
C1031	ECEA1CK100B	16V 10U
C1032	ECQV1H154JZ3	50V 0.15U
C1033	ECEA1CK100B	16V 10U
C1034-1036	ECQB1H103JZ	50V 0.01U
C1037	ECQM1H222KV3	50V 2200P
C1038, 1039	ECEA1HK4R7	50V 4.7U
C1040, 1041	ECEA1CK101	16V 100U
C1042	ECEA1HK4R7	50V 4.7U
C1043	ECQV1H474JZ3	50V 0.47U
C1045, 1046	ECEA1CK100B	16V 10U
C1047, 1048	ECBT1H470J5	50V 47P
C1049, 1050	ECBT1E103ZF	25V 0.01U
C1301, 1302	ECEA1HU3R3	50V 3.3U
C1303, 1304	ECBA1H681KB5	50V 680P
C1305, 1306	ECBT1H821KB5	50V 820P
C1307, 1308	ECEA1HU220	50V 22U
C1309, 1310	ECBT1H100JC5	50V 10P
C1311	ECEA2AU100	100V 10U
C1312	ECEA1JU220	63V 22U
C1313, 1314	ECKT1H223ZF	50V 0.022U
C1315, 1316	ECEA1VU332	35V 3300U ⚠
C1317	ECKR2H103ZU	500V 0.01U ⚠
C1318	ECKR1H103ZF5	50V 0.01U
C1321, 1322	ECEA1HK3R3	50V 3.3U
C1403	ECEA1HU010	50V 1U
C1404	ECQM1H332KV3	50V 3300P
C1405	ECBT1H561KB5	50V 560P
C1406	ECQB1H104KF3	50V 0.1U
C1407	ECEA1CK470	16V 47U
C1408-1410	ECQB1H104KF3	50V 0.1U
C1411	ECQM1H332KV3	50V 3300P
C1412	ECBT1H561KB5	50V 560P
C1413	ECEA1HK010B	50V 1U
C1414	ECQM1H123JZ	50V 0.012U
C1415	ECFR1E104KR	25V 0.1U
C1416	ECEA0JU221	6.3V 220U
C1441	ECEA0JU220B	6.3V 22U
C1457	ECEA1CK100B	16V 10U

Ref. No.	Part No.	Values & Remarks
C1458	ECQM1H472JZ	50V 4700P
C1459	ECQM1H273KV3	50V 0.027U
C1460	ECQM1H473JZ	50V 0.047U
C1461	ECEA1CK100B	16V 10U
C1462	ECQB1H104KF3	50V 0.1U
C1463	ECQV1H334JZ3	50V 0.33U
C1464	ECEA1CU221	16V 220U
C1465	ECEA1CK470	16V 47U
C1466	ECQM1H562JZ	50V 5600P
C1467	ECEA1CK100B	16V 10U
C1468, 1469	ECEA1HK010B	50V 1U
C1470	ECEA1EK3R3B	25V 3.3U
C1472, 1473	ECEA1EK3R3B	25V 3.3U
C1474, 1475	ECKR1H103ZF5	50V 0.01U
C1476-1478	ECBT1H181KB5	50V 180P
C1479	ECEA1CK100B	16V 10U
C1480	ECEA1CK470	16V 47U
C1481	ECEA1HK3R3	50V 3.3U
C1482, 1483	ECEA1EK3R3B	25V 3.3U
C1484	ECEA1HK010B	50V 1U
C1485	ECEA1CK100B	16V 10U
C1486	ECEA1HK3R3	50V 3.3U
C1487, 1488	ECBT1E103ZF	25V 0.01U
C1489, 1490	ECEA1EK3R3B	25V 3.3U
C1491	ECBT1H330J5	50V 33P
C2001, 2002	ECEA1VK4R7	35V 4.7U
C2005-2008	ECEA1CK100B	16V 10U
C2009-2012	ECQV1H393JZ3	50V 0.039U
C2013-2016	ECBT1C103KS5	16V 0.01U
C2017-2020	ECBT1C222KR5	16V 2200P
C2021-2024	ECBT1H102KB5	50V 1000P
C2025, 2026	ECEA0JK101	6.3V 100U
C2027	ECBT1E103ZF	25V 0.01U
C2028	ECEA0JK101	6.3V 100U
C2029, 2030	ECBT1E103ZF	25V 0.01U
C2031, 2032	ECBT1H330J5	50V 33P
C2035-2040	ECEA1VK3R3	35V 3.3U
C2051, 2052	ECBT1E103ZF	25V 0.01U

Printed in Japan
H910503570 NH/YU/TN

■ REAR PANEL TERMINALS AND FUNCTIONS

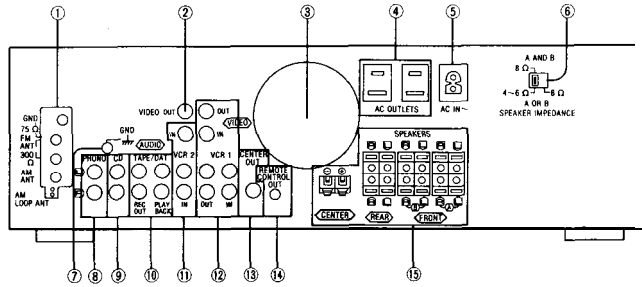

① Antenna connection terminals

② "VIDEO OUT" terminal

Connect a video connection cable (not included) to the video input terminal of TV or projection TV

③ Cooling fan

The cooling fan operates at high output power levels only.

④ Outlets "SWITCHED"

Power to these outlets is controlled by the power switch of this unit. Audio equipment rated up to 80 W (total for all outlets) can be connected here For proper remote-control operation. connect the power cords of the tape deck and compact disc player to these outlets as indicated below:

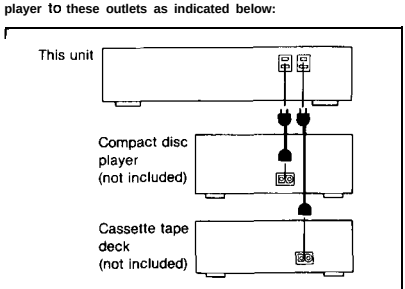

⑤ AC IN socket (AC IN)

Connect this socket to an AC outlet on the wall using the power supply cord.

⑥ Speaker impedance selector

Before use, se, to the correct Impedance corresponding to the impedance of the speaker systems being used

⑦ "GND" terminal

Connect the turntable's ground wire to this terminal (if applicable).

⑧ "PHONO" terminals

Connect a turntable only Do not connect any other sound source to these terminals.

⑨ "CD" terminals

Connect a stereo connection cable (not Included) to the "LINE OUT" terminal of the compact disc player

⑩ "TAPE/DAT" terminals

Connect a tape deck or a digital audio tape deck (DAT) by using stereo connection cables (not included).

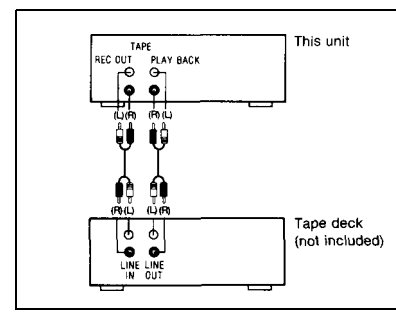

⑪ "VCR 2" terminals

Connect a second VCR or a video disc player by using stereo connection cable (not Included) and video connection cable (not included)

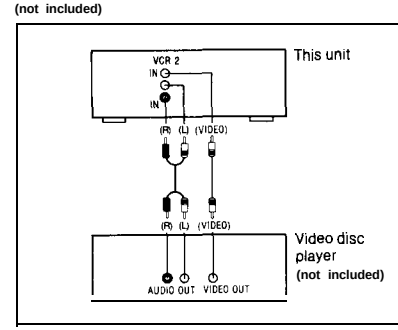

⑫ "VCR 1" terminals

Connect a "CR by using stereo connection cables (not included) and video connection cables (not included)

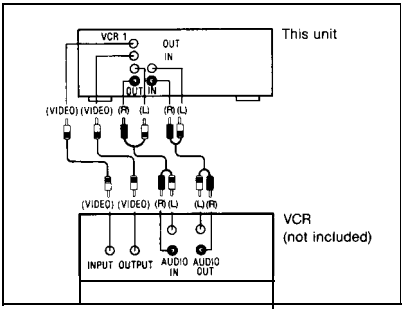

⑬ "CENTER OUT" terminal

This terminal is used to enjoy the Dolby Pro-Logic Surround and the Dolby 3 stereo sound

Connect a Y-adaptor cable (not Included) to the audio input terminal(s) of the external amplifier or TV

When using the speakers, after setting the center level of the this unit to MAX. adjust the volume on the external amplifier or the TV

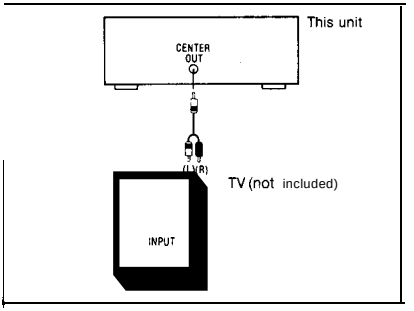

⑭ Remote-control OUT terminal (REMOTE CONTROL OUT)

This terminal can be used only with Technics components which have the appropriate remote-control terminal (Consul, your dealer for details)

Proper connection with remote-control connection cables SJP2257T will allow control of some functions from this unit's remote-control transmitter

Connect to a tape deck and/or compact disc player as shown

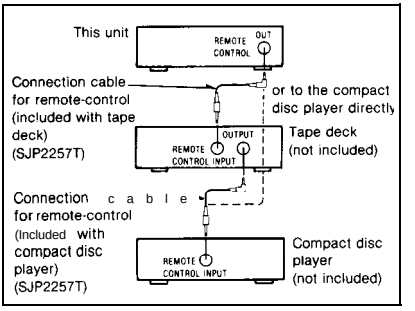

⑮ Speaker connection terminals

■ ACCESSORIES

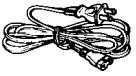

AC power supply cord 1 pc.
(SJA172-1): (P)
(SJA172) (PC)

Remote-control transmitter
(RAK-SA501P1) . . . 1 pc

Batteries
("M-4 "AAA" R03) 2 pcs

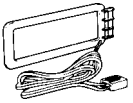

AM loop antenna
(SPB1 163T) 1 pc.

AM antenna holder . 1 pc
(SMA233-1 M)

Screws 2 pcs
(XTN3+10AFZ)

FM indoor antenna
(SSA272M) . . 1 pc

■ FRONT PANEL CONTROLS AND FUNCTIONS

The functions indicated by the numbers with black background (for example ❷) can be activated from both the main unit and the remote control transmitter.
(See pages 10 – 12.)

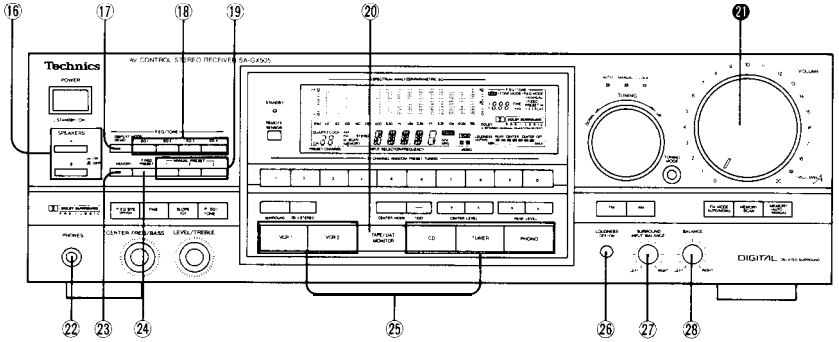

Amplifier section

⑯ Speaker selectors (SPEAKERS)
These selectors are used to select the speaker system(s) (A and/or B)

⑰ Display mode select button (-DISPLAY MODE, -DEMO)
This button is used to select either the spectrum analysis level ("Bar-type display" or "Dot display") or equalization level display.
If the button is pressed for 3 seconds or more, this unit will start a demonstration mode for the parametric EQ system.

⑱ Parametric EC band select buttons
These buttons are used to select the band to be adjusted

⑲ Equalization preset buttons (MANUAL PRESET)
These buttons are used for storing or recalling the curves made by the parametric EQ system

⑳ Tape-monitor switch (TAPE/DAT MONITOR)
Press this button to listen to a tape or a digital audio tape connected to the "TAPE/DAT" terminals.
To listen to some other source, press this button once again (so that the indicator is switched OFF).

@Volume control (VOLUME)

㉒ Headphones jack (PHONES)

㉓ Parametric EQ system memory button (MEMORY)
This button enables the curves to be stored in the parametric EQ system memory

㉔ Fixed preset button (FIXED PRESET)
This button is used to recall a "fixed preset" curve from the main unit's memory

㉕ Input selector buttons
These buttons are used to select the sound source to be heard, such as a disc, radio broadcasts, etc. The selected sound source is shown on the audio input selector/frequency display.
The "PHONO" input selector has two functions: When pressed momentarily it selects "PHONO". When pressed and held for about 4 seconds, it de-activates the muting function.

㉖ Loudness switch (LOUDNESS)
Set to the "ON" position (the loudness indicator will illuminate); when listening to music at low volume. Auditory perception of sound in the low frequency range falls off at low volume, but when the switch is in this position, this deficiency is compensated for, so that the full impact of the musical performance can be enjoyed.

㉗ Dolby Pro-Logic Surround input balance control (SURROUND INPUT BALANCE)
This control is used to minimize dialogue leakage in the surround channel thereby optimizing the Dolby Pro-Logic Surround decoding operation.

㉘ Balance control (BALANCE)

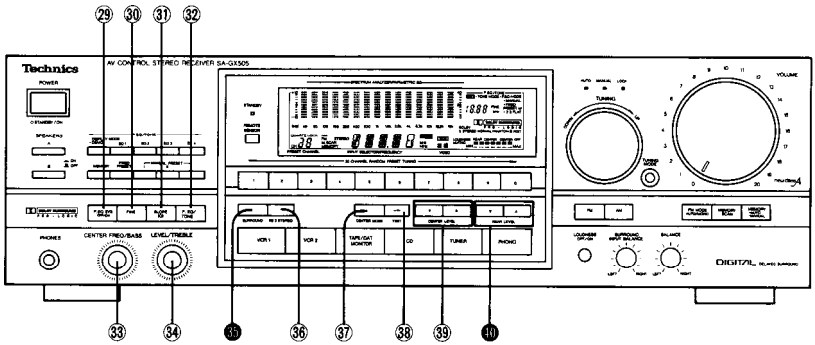

Amplifier section

29 Parametric EC system ON/OFF button (P. EQ SYS)
This button is used to turn the parametric EQ system ON or OFF

30 Fine mode select button (FINE)
This button is used to fine-adjust the center frequency Of the parametric EQ.

31 Slope changeover button [SLOPE (Q)]
This button is used to increase or decrease the slope of the parametric EQ curves

32 Parametric EQ/tone mode select button (P.EQ/TONE)
This button is used tc select parametric EQ mode or tone mode

33 Center frequency select/bass control (CENTER FRED/BASS)
This control is used to select the center frequency in the parametric EQ mode or to adjust the low-frequency sounds in the tone mode

34 Frequency level/treble control (LEVEL/TREBLE)
This control is used to adjust the frequency level in the parametric EQ mode or the high-frequency sounds in the tone mode.

35 Dolby Pro-Logic Surround ON/OFF button (SURROUND)
This button is used to activate the Dolby Pro-Logic Surround effect

36 Dolby 3 stereo ON/OFF button (3 STEREO)
This button is used tc activate the Dolby 3 stereo effect

37 Center mode select button (CENTER MODE)
Each bme you press this button, the center mode will change as follows: NORMAL- PHANTOM- CENTER OFF.

38 Test signal button (TEST)
When using the center speaker and the rear speakers, press this button to activate the test signal Then adjust the volume balance of the center speaker and rear speakers.

39 Center speaker level adjustment buttons (CENTER LEVEL)
These buttons are used to adjust the volume level of the center speaker

40 Rear speaker level adjustment buttons (REAR LEVEL)
These buttons are used to adjust the volume level of the rear speakers.

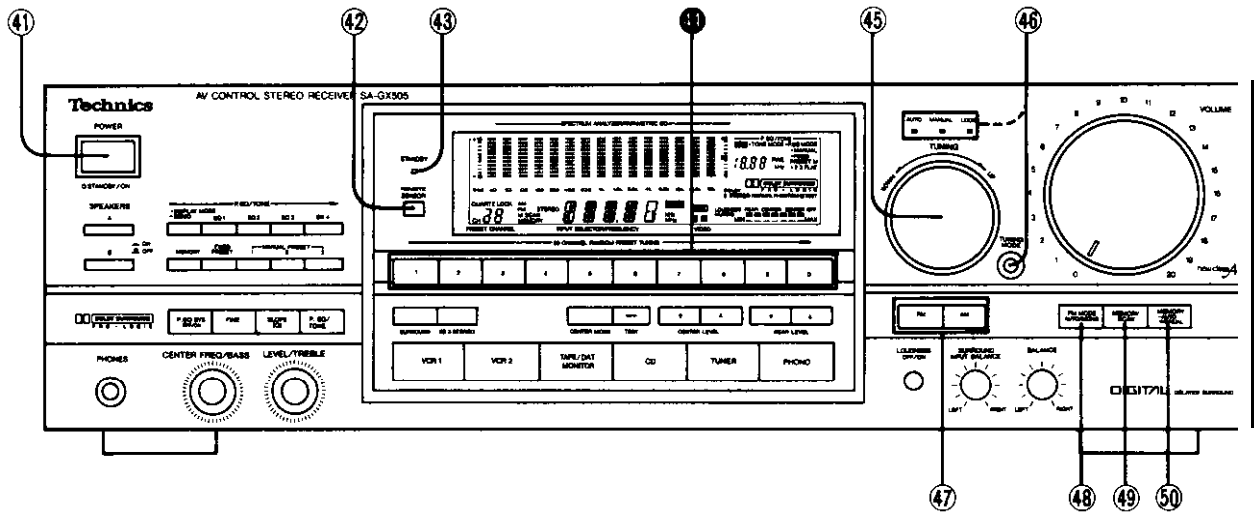

Tuner section

㊶ Power "⏻ STANDBY/ON" switch (POWER, ⏻ STANDBY/ON)

This switch is used to turn the power to the main unit ON and OFF.

Selecting "OFF" from the remote control transmitter actually sets the main unit to the "STANDBY" mode.

㊷ Remotetontrol signal receptor (REMOTE SENSOR)

Receives the signals from the remote-control.

㊸ "STANDBY" indicator (STANDBY)

This indicator illuminates when the "STANDBY" mode is se, by the main unit or the remote control transmitter.

㊹ Preset-tuning buttons (1-O) (30 CHANNEL RANDOM PRESET TUNING)

These buttons are used to preset broadcast frequencies into the memory of this unit and to recall the desired preset stations.

㊺ Tuning control (TUNING)

This control is used to select an FM or AM broadcast.

When turning the control to the left, the frequency changes downward. When turning the control to the right. the frequency changes upward.

㊻ Tuning-mode selector/indicator (TUNING MODE)

Each time this selector is pressed, the selection changes, in sequence. to "AUTO", "MANUAL" and "LOCK".

AUTO:

In this position. broadcast channels are automatically selected when the tuning control is momentarily turned to the left or right to start the frequency changing.

MANUAL:

In this position, the tuning control can be used to locate the desired channel manually.

The frequency changes only as the tuning control is turned to the right to left.

LOCK:

In this position, the broadcast channel presently being heard is locked in, and other broadcast stations cannot be tuned to, even if the tuning control is turned.

㊼ Band selectors

FM: Press this button to listen to an FM broadcast.

AM: Press this button to listen to an AM broadcast.

㊽ FM mode selector (FM MODE)

This unit automatically switches to the stereo mode when an FM stereo broadcast is received This selector is used to select the mode (stereo or monaural) of FM broadcast signals.

㊾ Memory scan button (MEMORY SCAN)

This button is used to locate a desired broadcast station: each broadcast station is selected for about 3 seconds.

㊿ Memory button (MEMORY)

This button is used when presetting broadcast station frequencies into memory.

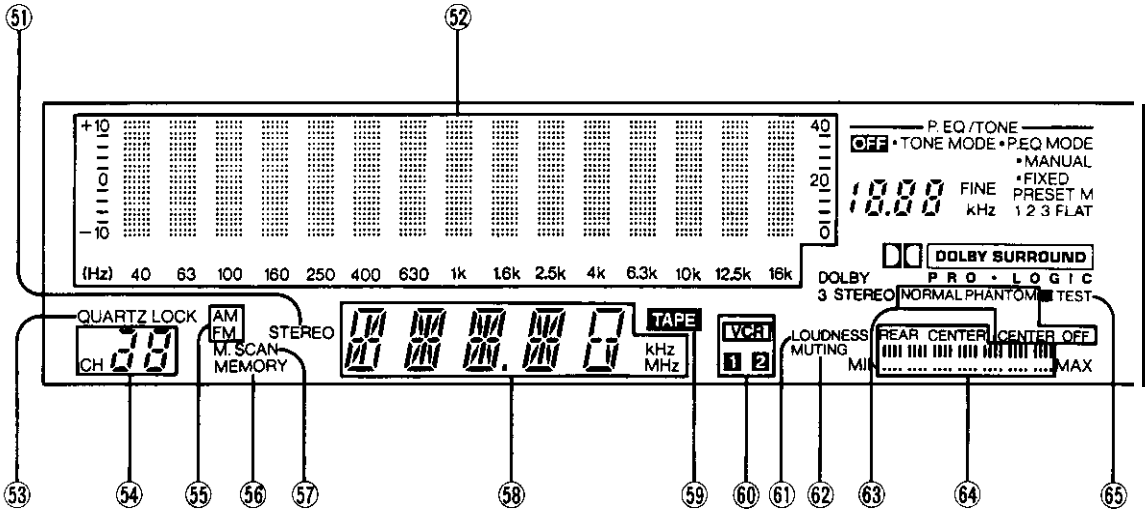

Display section

51 FM stereo indicator (STEREO)
This indicator automatically illuminates when an FM stereo broadcast is being received.

It will not illuminate if the FM mode selector is set to the monaural mode.

52 Spectrum analysis/parametric EQ level display (SPECTRUM ANALYZER/PARAMETRIC EQ)
This display shows the spectrum analysis level ("Bar-type display" or "Do, display") or equalization level.

53 Quartz-lock indicator (QUARTZ LOCK)
This indicator illuminates when the "nit is tuned precisely to a broadcast station.

54 Channel display
This display shows the channel number selected by one of the preset-tuning buttons.
Also this display shows the channel number for about 3 seconds during memory scan operation.

55 Band indicators (AM, FM)
Indicates the selected band.

56 Memory indicator (MEMORY)
This indicator illuminates when the memory button is pressed.

57 Memory scan indicator (M. SCAN)
This indicator illuminates when the memory scan button is pressed.

58 Audio input selector/frequency display (INPUT SELECTOR/FREQUENCY)
Displays the selected source or broadcast frequency.

59 Tape indicator (TAPE)
This indicator will illuminate when the tape-monitor switch is pressed.

60 VCR display (VCR)
Displays the selected VCR.

61 Loudness indicator (LOUDNESS)
This indicator will illuminate when the loudness switch is pressed.

62 Muting indicator (MUTING)
This indicator will illuminate when the muting button (on the remote-control transmitter) is pressed.

63 Center mode indicators
These indicators show the center mode selected by the center mode select button.

64 Rear/center level indicator
Displays the level adjusted by the center speaker level adjustment button or rear speaker level adjustment button.

65 Test signal indicator (■ TEST)
This indicator illuminates when the test signal button is pressed in the Dolby Pro-Logic Surround mode and the Dolby 3 stereo mode.

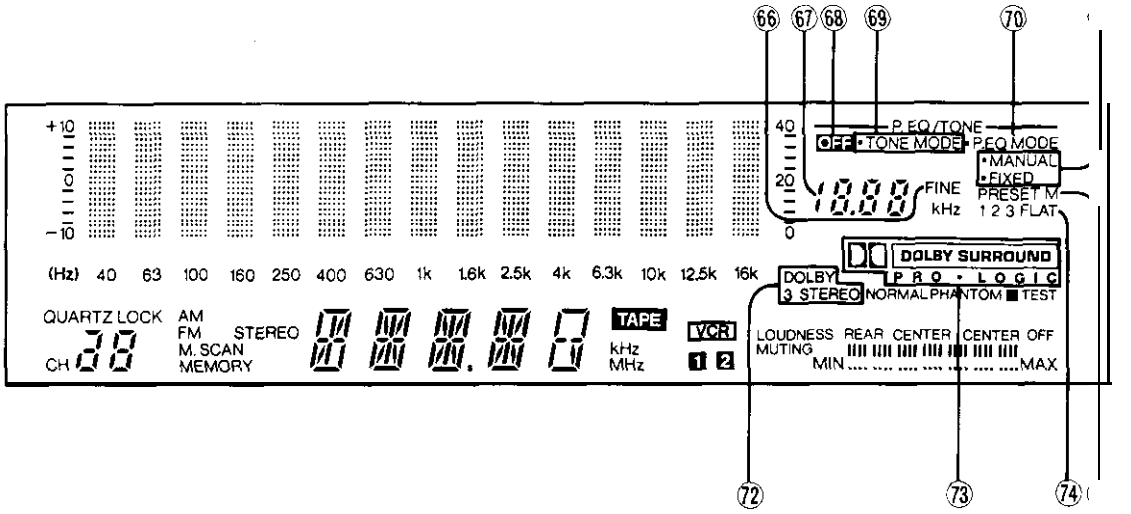

66 Fine mode indicator (FINE)

This indicator illuminates when the line mode select button is pressed in the parametric EQ mode.

67 Parametric EQ system center frequency display

It displays the center frequency of the curves in the parametric EQ mode arranged by the user with the parametric EQ system or the curves pre-programmed in this unit's memory.

68 Parametric EQ system off indicator (OFF)

This indicator illuminates when the parametric EQ system is Off.

69 Tone mode indicator (TONE MODE)

This indicator illuminates when the parametric EQ/tone mode select button is set to the tone mode.

70 Parametric EQ mode indicator (P.EQ MODE)

This indicator illuminates when the parametric EQ/tone mode select button is set to the parametric EO mode.

71 Parametric EQ system operation select indicators (MANUAL/FIXED)

One of these indicators will illuminate in accordance with the fixed preset button or equalization preset buttons setting.

72 Dolby 3 stereo indicator (DOLBY 3 STEREO)

This indicator illuminates when the Dolby 3 stereo ON/OFF button is switched ON.

73 Dolby Pro-Logic Surround indicator (DOLBY SURROUND, PRO-LOGIC)

This indicator illuminates when the Dolby Pro-Logic Surround mode is selected.

74 Manual/fixed preset indicators (1 2 3 FLAT)

It displays the type of curve selected with the equalization preset buttons or fixed preset button in the parametric EQ mode.

75 Parametric EQ system memory indicator (M)

This indicator illuminates when the parametric EQ system memory button is pressed in the parametric EQ mode.

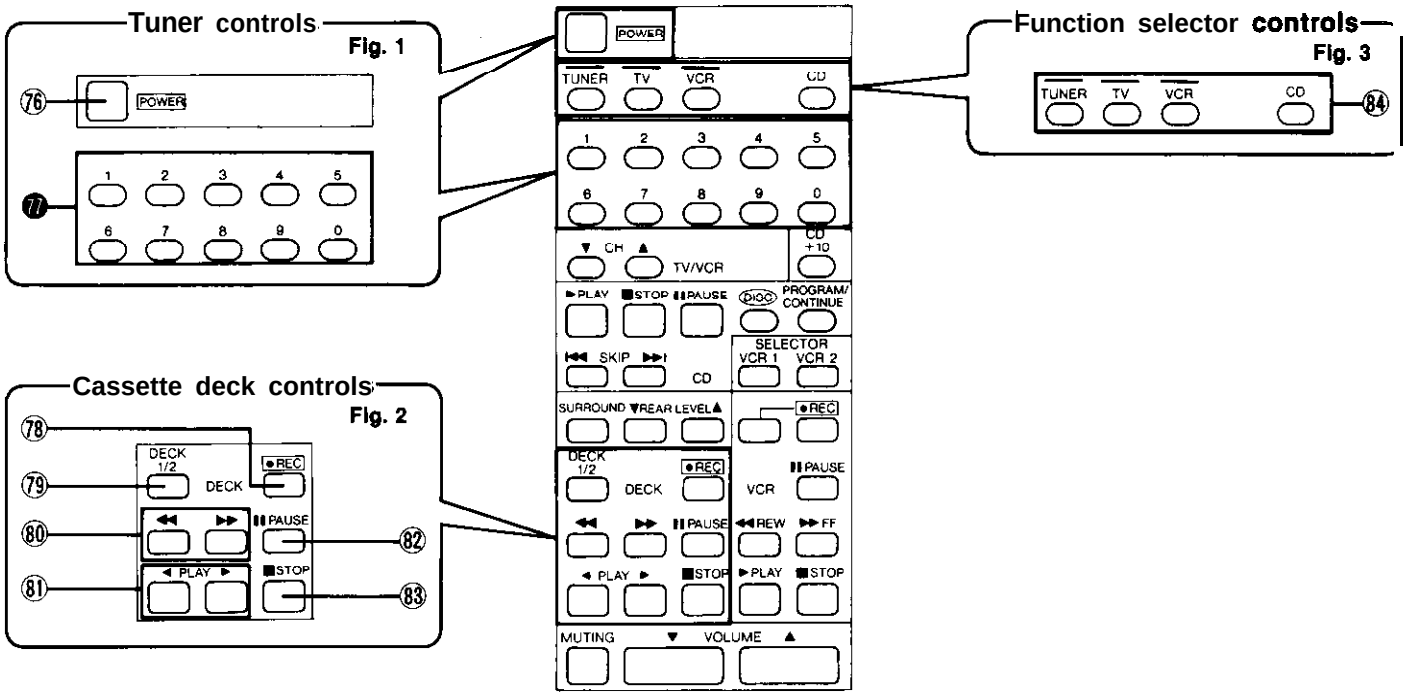

Remote control section

Tuner controls (Fig 1)

@Power **switch (POWER)**

This power switch is used for controlling the power (ON/OFF) of this system as well as any Panasonic remote controlled TV and/or VCR.

When switching the power of each unit ON and OFF, be sure to first press the appropriate function selector button on the remote control transmitter.

⑦⑦ **Preset-tuning buttons (1-O)**

These buttons are used to tune to broadcast stations that have bee" preset to the unit's memory.

When these buttons are used, be sure to first press the "TUNER" button of the function selector buttons on the remote control transmitter.

Cassette deck controls (Fig. 2)

⑦⑧ **Record button (● REC)**

Press this button to change to the recording stand-by mode.

⑦⑨ **Deck I/Deck 2 selector**

This button is used to select the deck to be operated by remote control when a double cassett deck is connected With this unit.

⑧⓪ **Fast-forward/cue/rewind/review buttons (◀◀, ▶▶)**

Press this button to advance or rewind the tape while the unit is in the stop mode.

Press this button to cue or review the contents at high speed, while the unit is in the play mode.

⑧① **Playback buttons (◀ PLAY ▶)**

To begin playback or recording, press one of these buttons corresponding to the side of the tape to be played (or recorded).

▶: For the "A"-side of the tape

◀: For the "B"-side of the tape

@Pause button (II PAUSE)

Press this button to temporarily stop playback or recording. Press the playback button to resume the play or recording.

@Stop **button (■ STOP)**

To stop tape movement.

Function selector controls (Fig. 3)

@Function **selector buttons (TUNER, TV, VCR, CD)**

These buttons are used to change the functions of this remote control.

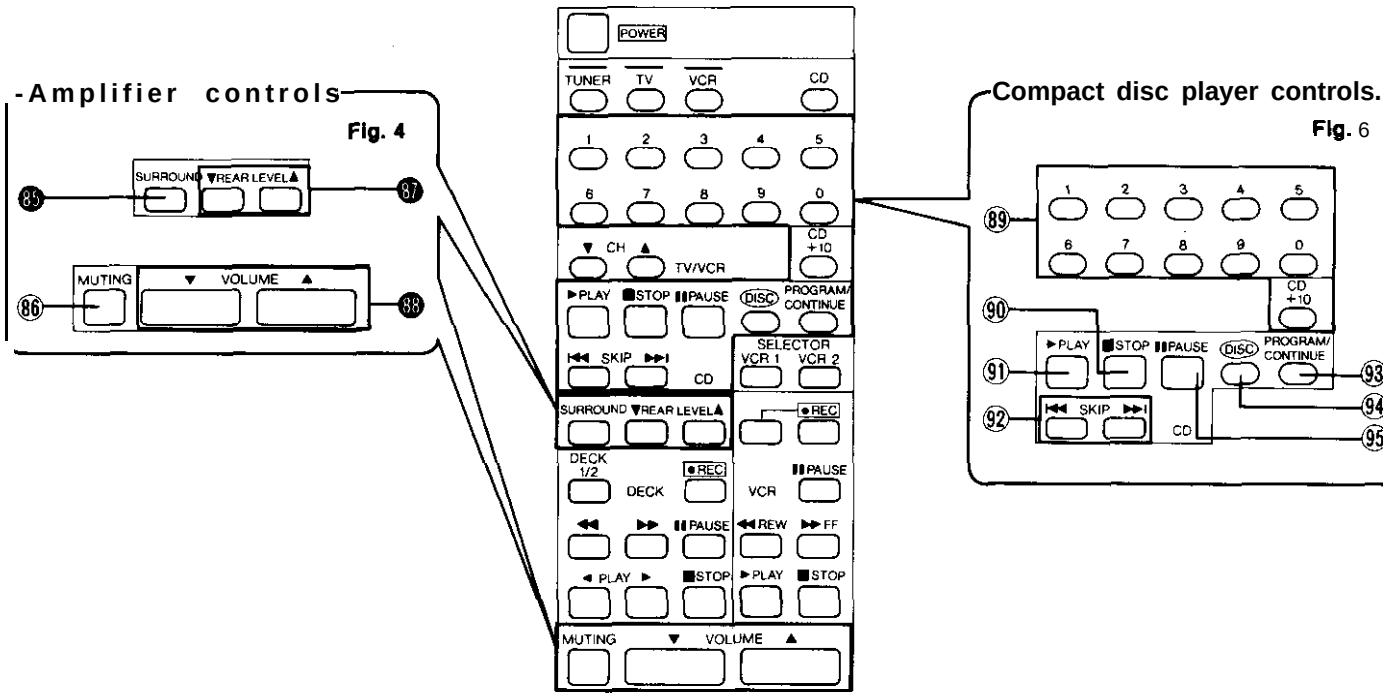

Amplifier controls (Fig. 4)

⑧⑤ Dolby Pro-Logic Surround ON/OFF button (SURROUND)
This button is used to activated the Dolby Pro-Logic Surround effect.

⑧⑥ Muting button (MUTING)
This button is used to temporarily attenuate ("mute") the volume level.

⑧⑦ Rear speaker level adjustment buttons (▼ REAR LEVEL A)
These buttons are used to adjust the volume level of the rear speaker systems.

@Volume control (▼ VOLUME A)
These buttons are used to adjust the volume level
▼: To reduce the volume level.
A: To increase the volume level.

Compact disc player controls (Fig. 5)

@Numeric buttons (I-O, +10)
These buttons are used to select the track or the disc number (only 1 – 5).
When these buttons are used, be sure to first press the "CD" button of the function selector buttons of the remote control transmitter.

⑨⓪ Stop button (■ STOP)
To stop compact disc play.

⑨① Play button (▶ PLAY)
To start compact disc play.

⑨② Skip buttons (I◀◀ SKIP ▶▶I)
Press one of these buttons briefly to move the pickup (backward or forward) to the beginning of a specific track.

@Program/continue button (PROGRAM/CONTINUE)
This button is used to select either the sequential play or program play mode.

⑨④ Disc button (DISC)
This button is used to select the disc when a multi compact disc player is connected with this unit.

⑨⑤ Pause button (II PAUSE)
To temporarily stop compact disc play

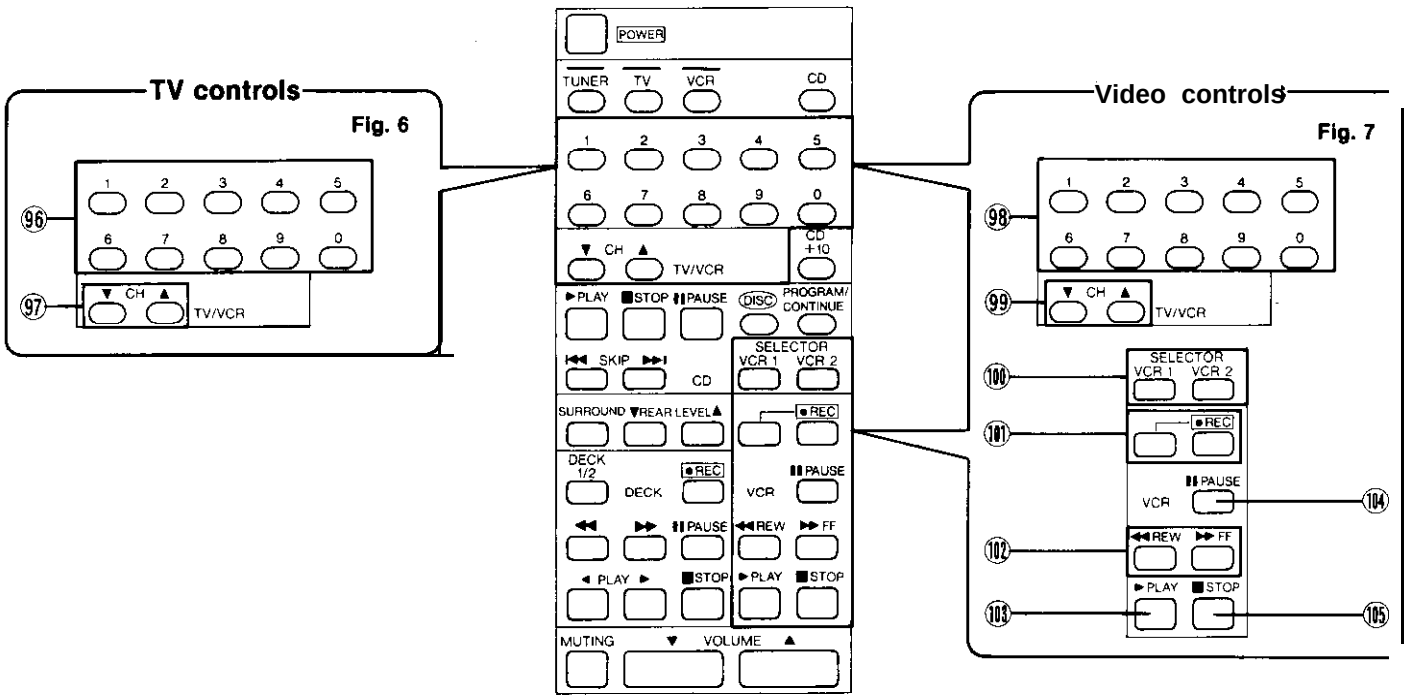

Remote control section

TV controls (Fig 6)

When the buttons (96, 97) are used, be sure to first press the "TV" button of the function selector buttons of the remote control transmitter.

@Preset **channel buttons (1-O)**
These buttons are used to select TV channels.

97 **Channel up/down buttons (▼ CH A)**
These buttons are used to select TV channels.

Video controls (Fig. 7)

When the buttons (98, 99) are used, be sure to first press the "VCR" button of the function selector buttons of the remote control transmitter.

@Preset **channel buttons (1-O)**
These buttons are used to select video channels.

99 **Channel up/down buttons (▼ CH ▲)**
These buttons are used to select video channels.

@Selector **buttons (SELECTOR)**
VCR 1: Press this button to select **the** "VCR" 1input selector position on the main "nit.
"CR 2: Press this button to select the "VCR 2" input selector position on the main "nit.

@Record buttons (● REC)
These buttons are used to record.

102 **Fast-forward/rewind buttons (◀◀ REW, . . FF)**
Press one of these buttons to advance or rewind the tape while the "nit is in the stop mode.

@Playback **button (▶ PLAY)**
This button is used for video playback.

104 **Pause button (▮▮ PAUSE)**
This button is used to pause during playback or video recording.

@Stop button (■ STOP)
This button is used to stop playback or video recording.